INTERIM ADVICE NOTE 101/07 Amendment 1

REVISED MCHW SPECIFICATION 900 SERIES

Summary
This Interim Advice Note includes a complete revised 900 Series of the Specification (MCHW1) for Road Pavements – Bituminous Bound Materials. Following the publication of new European Standards, this revised Specification includes the new names and designations for bituminous mixtures to be used from 1st January 2008. The revision also includes revised clause for sealing at cold joints to increase durability, a new clause for EME2 Asphalt Concrete and other minor revisions.

Instructions for Use
This IAN takes effect from 1st January 2008

Interim Advice

CONTENTS

		Page
1.	Introduction	3
2.	Implementation	3
3.	Background to this Interim Advice Note	3
4.	Revised Specification 900 Series Clauses	4

Interim Advice

1. Introduction

New BS EN Standards for bituminous mixtures and their associated test methods have recently been published. The new Standards are supported by a new British Standard that specifies requirements for the transport, laying and compaction of bituminous mixtures. The new BS EN Standards for bituminous mixtures will be implemented by industry on 1st January 2008 and the superseded British Standards will be withdrawn.

To ensure that the requirements of the new Standards are implemented in a controlled way on Highways Agency contracts, Series 900 of the Specification for Highway Works has been revised and is included in this Interim Advice Note. This revised Series 900 also includes new and revised clauses related to EME2 Asphalt Concrete and requirements for the sealing of cold joints to improve durability.

Interim Advice Note 101/07 has also been published at the same time and this provides guidance on how the new Standards - and the revised specification clauses that refer to them are to be applied to contracts that are under construction on 1st January 2008.

2. Implementation

The Specification Clauses in this Interim Advice Note shall be used from 1st January 2008 for the construction, implementation, improvement and maintenance of trunk roads. It shall apply also to all those schemes that are in preparation provided that, in the opinion of the Highways Agency, this will not result in significant additional expense or delay progress. Design Organisations shall confirm its application to particular schemes with the Highways Agency. Further guidance on the application of the revised 900 Series to schemes currently in progress is provided in IAN 102/07. The existing Series 900 Clauses and Notes for Guidance in the MCHW Volumes 1 and 2 will be withdrawn on 1st January 2008. A revision to the Notes for Guidance will be issued as separate Interim Advice Note along with the relevant Specification Appendices.

3. Background to this Interim Advice Note

The following BS EN Standards for bituminous mixtures have recently been published as part of European agreements:

BS EN 13108	Bituminous mixtures – Material specifications
BS EN 12697	Bituminous mixtures – Test methods for hot mix asphalt
BS 594987	Asphalt for roads and other paved areas – Specification for transport, laying, compaction and type testing protocols

The new Standards replace BS 594, BS 598 and BS 4987. These new BS EN Standards for bituminous mixtures will be implemented by industry on 1st January 2008.

BSI has published a guidance document that gives advice on how to specify UK standard mixtures using the new European Standards:

BSI PD 6691 Guidance on the use of BS EN 13108 Material Specifications

A Specification Clause for EME2 Asphalt Concrete has also been added and following recent research looking at improvements for durability, revised clauses have been included relating to the sealing of cold joints.

Queries on the revised specification clauses should be made to:

Donna James
SSR Asset Management Performance Division
PGSG Pavement Engineering Team 07887 625445
Highways Agency donna.james@highways.gsi.gov.uk

4. Specification 900 Series

Contents

Clause	Title
901	Bituminous Pavement Mixtures
902	Reclaimed Asphalt
903	Placing and Compaction of Bituminous Mixtures
904	Hot Rolled Asphalt Base
905	Hot Rolled Asphalt Binder Course (Recipe Mixtures)
906	Dense Base and Binder Course Asphalt Concrete with Paving Grade Bitumen (Recipe Mixtures)
907	Regulating Course
908	Not Used
909	6 mm Dense Asphalt Concrete Surface Course
910	Hot Rolled Asphalt Surface Course (Recipe Mixtures)
911	Hot Rolled Asphalt Surface Course (Design Mixtures)
912	Close Graded Asphalt Concrete Surface Course
913	Not used
914	Fine Graded Asphalt Concrete Surface Course
915	Coated Chippings for Application to Hot Rolled Asphalt Surfacings
916	Open Graded Asphalt Concrete Surface Course
917	Not used
918	Slurry Surfacing Incorporating Microsurfacing
919	Surface Dressing: Recipe Specification
920	Bond Coats, Tack Coats and Other Bituminous Sprays
921	Surface Macrotexture of Bituminous Surface Courses
922	Surface Dressing: Design, Application and End Product Performance
923	Binder Recovery using the Rapid Recovery Test (RRT) and Accelerated Ageing using the Modified Ageing Rolling Thin Film Oven Test (RTFOT)
924	High Friction Surfaces
925	Testing of Bituminous Mixtures
926	In Situ Recycling: The Repave Process
927	Not Used
928	Determination of the Complex Shear (Stiffness) Modulus (G*) and Phase Angle (δ) of Bituminous Binders using a Dynamic Shear Rheometer (DSR)
929	Dense Base and Binder Course Asphalt Concrete (Design Mixtures)
930	EME2 Base and Binder Course Asphalt Concrete
931	Not used
932	Not Used
933	Not Used
934	Not Used
935	Not Used
936	Not Used
937	Stone Mastic Asphalt (SMA) Binder Course and Regulating Course
938	Porous Asphalt
939	Determination of Cohesion of Bitumen and Bituminous Binders
940	Not Used
941	Modified Binder Storage Stability Test
942	Thin Surface Course Systems
943	Hot Rolled Asphalt Surface Course and Binder Course (Performance-Related Design Mixtures)
944	Not used
945	Weather Conditions for Laying of Bituminous Mixtures
946	Not used
947	In-situ Cold Recycled Bound Material
948	Ex-situ Cold Recycled Bound Material
949	Repairs to Potholes and Depressions
950	Surface Preservation Systems
951	Patching
952	Not used
953	Durability of Bituminous Materials - Saturation Ageing Tensile Stiffness (SATS) Test
954	Method for Laboratory Determination of Interface Properties using the Modified Leutner Shear Test
955	Emergency Patching

Withdrawn

901 Bituminous Pavement Mixtures

General

1 This clause gives general requirements for the properties of the aggregates and bitumen used in plant-produced bituminous mixtures. These requirements apply to all plant produced bituminous mixtures unless otherwise specified in Appendix 7/1 or where other requirements are given in specific Clauses in this Series.

2 Bituminous mixtures shall be produced in plants that are registered to the BS EN ISO 9001 'Sector Scheme 14 for the Production of Asphalt Mixtures' described in Appendix A and shall be laid by contractors registered to and operating in compliance with the 'Sector Scheme 16 for the Laying of Asphalt Mixes' described in Appendix A. All mixtures supplied in accordance with BS EN 13108 shall be CE marked.

Aggregates for Bituminous Mixtures

3 Natural, recycled unbound and manufactured (artificial) aggregates shall be clean, hard and durable and shall comply with BS EN 13043. Where recycled coarse aggregate or recycled concrete aggregate is used in bituminous mixtures, it shall have been tested in accordance with Clause 710 and the content of other materials (Class X) including wood, plastic and metal shall not exceed 1% by mass. Reclaimed asphalt shall comply with Clause 902.

4 The use of aggregate derived as a by-product during the extraction of china clay is permitted. It shall comply with the requirements of this clause, BS EN 13043 and the detailed requirements of the relevant annex of BSI PD6691.

5 The use of crushed slate aggregate is permitted in base and binder course layers. It shall comply with the requirements of this clause, BS EN 13043 and the detailed requirements of the relevant annex of BSI PD 6691, except for the flakiness category, which shall be subject to prior approval by the Overseeing Organisation. Mixtures of crushed slate aggregate with coarse aggregate of a different geological type shall not be permitted.

Resistance to Fragmentation (Hardness)

6 Irrespective of source, coarse aggregates for bituminous mixtures shall be considered suitable, unless otherwise specified in Appendix 7/1, if:

(i) the resistance to fragmentation category of the coarse aggregate as defined in clause 4.2.2 of EN 13043 shall be LA_{30} or better for natural aggregates and LA_{50} or better for blast furnace slag

or

(ii) crushed rock aggregate has a Los Angeles Value greater than 30 but less than 35, where evidence can be presented to the Overseeing Organisation of previous satisfactory use of the source in asphalt;

Natural and manufactured (artificial) aggregates recovered from a previous use in an unbound form shall comply with the requirements of this Clause.

Resistance to Freezing and Thawing (Durability)

7 When required in Appendix 1/5, the resistance of the coarse aggregate to freezing and thawing shall be tested. The freezing and thawing (soundness) category, as defined in BS EN 13043, clause 4.2.9.2, shall be MS_{25} unless otherwise specified in Appendix 7/1. The water absorption value of the coarse aggregate shall be determined in accordance with BS EN 13043, clause 4.2.9.1. If the water absorption value of the coarse aggregate is greater than $WA_{24}2$, the soundness test shall be carried out on the material delivered to site. The requirements for water absorption do not apply to blastfurnace slag aggregate.

Cleanness

8 Unless otherwise specified in Appendix 7/1, the proportion of coarse and fine aggregates for bituminous mixtures passing the 0.063 mm test sieve (fines content) shall not exceed the limits stated in BSI PD 6691 Annex B, Annex C and Annex D, when tested in accordance with the washing and sieving method of BS EN 933-1.

Resistance to Polishing and Surface Abrasion

9 When specified in the appropriate clause or Appendix 7/1, the aggregate shall conform to the required declared PSV category in accordance with BS EN 13043 clause 4.2.3 and BSI PD 6682 clause 3.3.2.

10 An aggregate shall be deemed acceptable if the mean of the three most recent consecutive PSV results from tests relating to the aggregate to be supplied, carried out within the previous 6 months by testing by an appropriate organisation accredited in accordance with sub-Clauses 105.3 and 105.4 for those tests, within 6 weeks of sampling, complies with the declared categories specified in Appendix 7/1.

11 The resistance to surface abrasion of coarse aggregate used in surface courses in accordance with BS EN 13043 clause 4.2.3 and BSI PD 6682 clause 3.3.3, shall conform to category AAV_{10} or such other category as specified in the appropriate clause or in Appendix 7/1.

Chemical Requirements

Dicalcium Silicate Disintegration

12 Air-cooled blast furnace slag aggregates shall be free from iron dicalcium silicate disintegration as defined in BS EN 13043, clause 4.3.4.1.

Iron Disintegration

13 Air-cooled blast furnace slag aggregates shall be free from iron disintegration as defined in BS EN 13043, clause 4.3.4.2.

Volume Stability

14 The volume stability category of steel slag aggregates as defined in BS EN 13043, clause 4.3.4.3 shall not exceed V10.

Bitumen

15 Paving grade bitumen shall comply with BS EN 12591 and supplied from locations that are registered to the BS EN ISO 9001 'Sector Scheme 15 for the Supply of Paving Bitumens' described in Appendix A.

16 Polymer modified bitumen shall comply with BS EN 14023 and shall have British Board of Agrément HAPAS Roads and Bridges Certification to demonstrate their performance. Polymer modified bitumen without British Board of Agrément HAPAS Roads and Bridges Certification shall not be used without prior approval by the Overseeing Organisation.

Asphalt Durability

17 The durability of adhesion in base and binder course mixtures designed in accordance with Clause 929 and to be used on trunk roads including motorways shall be determined by testing in accordance with Clause 953. The SATS Durability Index of the mix components shall be above 80%.

18 Mixtures that include 2% hydrated lime filler are deemed to satisfy this requirement and SATS testing is not required. Hydrated lime filler shall be $Ca(OH)_2$ in the form of hydrated lime, type CL 90-S, complying the requirement in sub-clause 901.17.

902 Reclaimed Asphalt

1 The requirements of this clause apply to all bituminous mixtures containing reclaimed asphalt.

2 Reclaimed asphalt may be used in the production of bituminous surface course, binder course, regulating course and base. Unless otherwise specified in Appendix 7/1, the use of reclaimed asphalt shall be in accordance with:

(i) the relevant British Board of Agrément HAPAS Road and Bridges Certificate for surface course mixtures specified in Clause 942
(ii) BSI PD 6691, B.2.4.4 for Asphalt Concrete mixtures (macadams)
(iii) BSI PD 6691, C.2.3.4 for Hot Rolled Asphalt mixtures
(iv) BSI PD 6691, D.2.2.3 for Stone Mastic Asphalt mixtures

Other recycled materials shall only be used in bituminous mixtures with the approval of the Overseeing Organisation. The mixed material shall comply with the requirements of all the relevant clauses in this Series.

Reclaimed Feedstock

3 All reclaimed material shall be pre-treated before use such that it is homogeneously mixed and the maximum particle size does not exceed 32 mm.

Properties of Binder

4 The fresh bitumen added to the mixture shall not be more than two grades softer than the nominal grade for the mixture given in Table 12 of BSI PD 6691. Checks on the penetration of the binder recovered from the reclaimed asphalt, together with a calculation of the properties of the combined binder, shall be carried out in accordance with the relevant parts of BS EN 13108. When more than 10% of reclaimed asphalt is incorporated in a mixture, tests on binder recovered from the mixture shall be carried out in accordance with BSI PD 6691 13.3.6.2. The results shall be within the limits set out in BSI PD 6691 13.3.6.2.

Mixed materials containing more than 25% reclaimed asphalt

5 When more than 25% of reclaimed asphalt is incorporated in a designed base or binder course mixture, cores taken to assess compliance with Clause 929.12 or Clause 930.14 shall also be tested for stiffness in accordance with BS EN 12697-26 (ITSM method 20°C). The frequency of testing shall be agreed with the Overseeing Organisation prior to the commencement of works.

6 The stiffness of the mixture shall comply with the appropriate category from Table 9/1.

TABLE 9/1: Stiffness categories for designed base and binder course mixtures incorporating greater than 25% reclaimed asphalt

Nominal binder grade of mixture	Stiffness category (S_{min})
10/20	5500
15/25	5500
30/45	2800
40/60	1800

903 Placing and Compaction of Bituminous Mixtures

General

1 This clause gives general requirements for placing and compaction of bituminous mixtures, which are complementary and additional to the requirements of BS 594987. These requirements and the requirements of BS 594987 apply to all bituminous mixtures, unless otherwise specified in the other Clauses in this Series or in Appendix 7/1.

2 Bituminous pavements shall be constructed using the materials specified in Appendix 7/1 and shall be laid by contractors that are registered to the BS EN ISO 9001 'Sector Scheme for the Laying of Asphalt Mixes' described in Appendix A.

3 In order to exclude moisture from interfaces and ensure full interlayer bonding, the surface of all bituminous material shall be kept clean and uncontaminated. Unless agreed with the Overseeing Organisation, the only traffic permitted to run on the surface of bituminous material to be overlaid shall be that engaged in laying and compacting the next course or, where a binder course is to be blinded or surface dressed, that is engaged on such surface treatment. If any surface becomes contaminated, it shall be made good by cleaning and, if this proves impracticable, by rectification in compliance with Clause 702.

4 Prior to placing bituminous material on any new or existing bound substrate, a bond coat or tack coat shall be applied in accordance with Clauses 920 or 942, as appropriate.

5 Before work commences, the contractor shall submit a method statement to the Overseeing Organisation that includes:

(i) Laying and compaction procedures for each layer – including paving speed and paved width; size, type and number of rollers; and number of roller passes.
(ii) The joint formation procedures for each layer – including the location of longitudinal and transverse joints; and the method(s) of treating upstanding edges.

Transporting

6 Hot bituminous mixtures shall be transported in accordance with the requirements of BS 594987 and shall remain covered whilst awaiting tipping.

Laying

7 Hot bituminous mixtures, other than those specified under Clause 942, shall be laid in accordance with the requirements of BS 594987 and sub-Clauses 8 to 14 of this Clause. Surfacings specified under Clause 942 shall be laid in accordance with the requirements of that Clause and sub-Clauses 8 to 14 of this Clause.

8 Wherever practicable, hot bituminous mixtures shall be spread, levelled and tamped by a self-propelled paving machine. The rate of delivery of material to the paver shall be regulated to enable the paver to operate continuously.

9 Hand placing of hot bituminous mixtures shall be restricted to the following circumstances:

(i) For laying regulating courses of irregular shape and varying thickness.
(ii) In confined spaces where it is impracticable for a paver to operate.
(iii) For footways.
(iv) At the approaches to expansion joints at bridges, viaducts or other structures.
(v) For laying mastic asphalt.

10 Hand-raking of surface course material or the addition of such material by hand-spreading to the paved area, for adjustment of level, shall be restricted to the following circumstances:

(i) At the edges of the layers of material and at gullies, manholes and other ironwork.
(ii) At the approaches to expansion joints at bridges, viaducts or other structures.

11 The method of laying shall be such that the finished mat is free from dragging, tearing and segregation of the material.

12 When laying mixtures from more than one source, the mixtures shall have equivalent laying and compaction characteristics so that surface evenness is not compromised.

13 When paving adjacent to an expansion joint of a structure, the joint or joint cavity shall be kept clear of material. When laying binder course or surface course, the paver shall be taken out of use whilst laying the remainder of the pavement up to the joint and the corresponding area beyond it.

14 When paving directly onto bridge deck waterproofing systems, any special requirements which apply to that system shall be complied with.

Compaction

15 The compaction of hot bituminous mixtures shall be in accordance with BS 594987 and the requirements for specific mixtures in:

(i) Clause 929 for dense base and binder course asphalt concrete (design mixtures).
(ii) Clause 930 for EME2 mixtures.
(iii) Clause 942 for thin surface course systems.

16 Except where otherwise specified, rollers shall comply with the general requirements of BS 594987 except that the minimum mass of deadweight smooth wheeled rollers shall be 8 tonnes. Multi-wheeled pneumatic-tyred rollers and vibratory rollers may be used if they are capable of achieving at least the standard of compaction of an 8-tonnes deadweight roller.

17 Where compaction is to be determined in accordance with Clauses 929 and 930, the requirements to prove the performance of rollers do not apply. In such cases, the Contractor may use any plant to achieve the specified level of compaction and shall finish compaction at temperatures above the minimum specified rolling temperature.

18 Vibratory rollers shall not be used in vibrating mode on bridge decks.

Chippings

19 The application of coated chippings to areas of surface course shall be by a mechanical spreader capable of distributing chippings to an even rate of spread. Addition of chippings by hand operation shall only be permitted in the following circumstances:

(i) In confined spaces, where it is impracticable for a chipping spreader to operate.
(ii) As a temporary expedient, when adjustments have to be made to the spreader distribution mechanism.
(iii) When hand laying of the surface course is permitted.
(iv) To correct uneven distribution of chippings.

Interim Advice

20 Chippings shall be applied uniformly and rolled into the surface so they are effectively held and provide the initial macrotexture depth specified in Clause 921.

Joints

21 Unless otherwise specified in Appendix 7/1, longitudinal joints in all layers shall be situated outside wheel-track zones. For the purposes of this Clause, the wheel-track zones shall be taken to be between 0.5 m and 1.1 m and between 2.55 m and 3.15 m from the centre of the nearside lane markings for each traffic lane (or, in the absence of lane markings, lane edges). All joints shall be offset at least 300 mm from parallel joints in the layer beneath. Joints in the surface course shall coincide with either the lane edge or the lane marking, whichever is appropriate.

22 Unless otherwise specified in Appendix 7/1, the faces of all cold upstanding edges, including previously laid asphalt, against which hot bituminous mixtures are to be laid to form joints shall be treated with one of the following:

(i) hot bituminous binder with a penetration of not less than 40 pen.
(ii) hot elastomeric polymer-modified bituminous binder complying with BS EN 14023 with a penetration of not less than 40 pen.
(iii) cold applied thixotropic bituminous compound of similar bitumen or polymer-modified bitumen grade.
(iv) polymer-modified adhesive bitumen strip with a minimum thickness of 2 mm.

This operation shall be done so that the binder adheres to both the cold and the warm upstanding edges when the asphalt is placed.

23 Joints in regulating and binder courses that are less than 60 mm thick shall be treated as specified in BS 594987 for surface courses.

24 Unless otherwise specified in Appendix 7/1, joints in binder courses and bases shall be compacted such that the air voids content measured from core pairs whose centres are not more than 100 mm from the final joint is not greater than 2% above the maximum permitted limit for core pairs in the body of the mat. The air voids content shall be calculated in accordance with BS EN 12697-8 using the relevant bulk and maximum densities defined in Appendix B of BS EN 13108-20 for the relevant mixture type.

25 Within 24 hours of the joint being formed, a sealant shall be applied to the top surface of all base and binder course joints such that there is not less than 0.50 kg/m² of residual bitumen 75 mm either side of the joint, unless otherwise specified in Appendix 7/1. The sealant, which may contain mineral filler to BS EN 13043, shall be one of the following:

(i) hot elastomeric polymer-modified bituminous binder complying with BS EN 14023 with a penetration of not less than 40 pen.
(ii) bitumen emulsion with a cohesion by pendulum of Class 4 or above in accordance with BS EN 13808.
(iii) slurry surfacing complying with Clause 918.

26 Unless otherwise specified in Appendix 7/1, a sealant, as specified in sub-Clause 25 of this Clause, shall be applied to the whole of any freestanding edge on the outside of the finished pavement on the high side of the camber and, when specified in Appendix 7/1, on the low side.

Regulating Course

27 Regulating course material shall be made and laid in accordance with the requirements of Clause 907.

Use of Surfaces by Traffic

28 Where a bituminous layer other than the surface course is to be opened to highway traffic as a temporary running surface it shall either:

(i) be surface dressed in accordance with Clause 919 using chippings of category not less than PSV_{50}, unless otherwise specified in Appendix 7/1, or
(ii) contain a coarse aggregate of category of not less than PSV_{50}, unless otherwise specified in Appendix 7/1.

29 Construction plant and traffic used on pavements under construction shall be suitable in relation to the material, condition and thickness of the courses it traverses so that damage is not caused to the subgrade or the pavement courses already constructed. The wheels or tracks of plant moving over the various pavement courses shall be kept free from deleterious materials.

904 Hot Rolled Asphalt Base

1 Hot Rolled Asphalt base recipe mixes shall conform to BS EN 13108-4, the detailed requirements of BSI PD 6691 Annex C and requirements specified in Appendix 7/1. The mixture designation shall be one of the following:

(i) HRA 60/32 base 40/60
(ii) HRA 60/32 base 30/45
(iii) HRA 60/20 base 40/60
(iv) HRA 60/20 base 30/45

905 Hot Rolled Asphalt Binder Course (Recipe Mixtures)

1 Hot Rolled Asphalt binder course recipe mixes shall conform to BS EN 13108-4, the detailed requirements of BSI PD 6691 Annex C and requirements specified in Appendix 7/1. The mixture designation shall be one of the following:

(i) HRA 60/32 bin 40/60
(ii) HRA 60/32 bin 30/45
(iii) HRA 60/20 bin 40/60
(iv) HRA 60/20 bin 30/45

906 Dense Base and Binder Course Asphalt Concrete (Recipe Mixtures)

1 Dense base and binder course asphalt concrete (formerly macadam) recipe mixtures shall be asphalt concrete conforming to BS EN13108-1, the detailed requirements from BSI PD 6691 Annex B and requirements specified in Appendix 7/1. The mixture designation shall be one of the following:

(i) AC 32 dense base 40/60 rec
(ii) AC 32 dense base 100/150 rec
(iii) AC 32 dense base 160/220 rec
(iv) AC 32 dense bin 40/60 rec
(v) AC 32 dense bin 100/150 rec
(vi) AC 32 dense bin 160/220 rec
(vii) AC 20 dense bin 40/60 rec
(viii) AC 20 dense bin 100/150 rec
(ix) AC 20 dense bin 160/220 rec

907 Regulating Course

1 Regulating courses, which may consist of one or more layers of a bituminous material, shall have their finished surfaces laid to achieve the appropriate tolerances for

Interim Advice

horizontal alignments, surface levels and surface regularity for pavement layers, in accordance with Clause 702.

2 Unless otherwise specified in Appendix 7/1, stone mastic asphalt complying with Clause 937, or base or binder course asphalt concrete complying with Clause 929 or hot rolled asphalt complying with Clause 943, shall be used for regulating courses immediately below surface courses. Bituminous mixtures for regulating courses shall meet the requirements for the appropriate material, as specified above.

3 Where the total depth of a regulating course exceeds 150 mm then the course shall be laid so that each regulating layer has a compacted thickness of between 75 mm and 150 mm.

908 not used

909 6mm Dense Asphalt Concrete Surface Course

1 6mm dense asphalt concrete (formerly macadam) surface course shall be asphalt concrete conforming to BS EN13108-1, the detailed requirements of BSI PD 6691 Annex B and requirements specified in Appendix 7/1. The mixture designation shall be one of the following:

(i) AC 6 dense surf 100/150
(ii) AC 6 dense surf 70/100

Coarse Aggregate

2 To ensure adequate resistance to polishing and abrasion, the coarse aggregate shall have a minimum declared PSV as specified in Appendix 7/1, in accordance with BS EN 13043, clause 4.2.3. and BSI PD 6682-2, and shall have a maximum declared AAV, as specified in Appendix 7/1, in accordance with BS EN 13043, clause 4.2.4 and BSI PD 6682-2.

910 Hot Rolled Asphalt Surface Course (Recipe Mixtures)

1 Hot Rolled Asphalt surface course recipe mixes shall conform to BS EN 13108-4, the detailed requirements of BSI PD 6691 Annex C, and requirements specified in Appendix 7/1. Unless otherwise specified in Appendix 7/1, the mixture designation shall be one of the following:

(i) HRA 0/2 F surf 40/60
(ii) HRA 15/10 F surf 40/60
(iii) HRA 30/10 F surf 40/60
(iv) HRA 30/14 F surf 40/60
(v) HRA 35/14 F surf 40/60

When the mixture designation is not specified in Appendix 7/1, the mixture selected by the Contractor shall be notified to the Overseeing Organisation prior to its use in the Works.

Coarse Aggregate

2 The resistance to polishing of the coarse aggregate for chipped mixtures shall be category PSV_{44} as defined in BS EN 13043, clause 4.2.3.

Coated Chippings

3 When required, coated chippings shall be either 14/20 mm or 8/14 mm, as specified in Appendix 7/1 and comply with Clause 915.

Interim Advice

911 Hot Rolled Asphalt Surface Course (Design Mixtures)

1 Hot Rolled Asphalt surface course design mixes shall conform to BS EN 13108-4, the detailed requirements of BSI PD 6691 Annex C and requirements specified in Appendix 7/1. The mixture designation shall be one of the following:

(i) HRA 0/2 F surf xx/yy des
(ii) HRA 30/10 F surf xx/yy des
(iii) HRA 35/14 F surf xx/yy des
(iv) HRA 55/10 F surf xx/yy des
(v) HRA 55/14 F surf xx/yy des
(vi) HRA 0/2 C surf xx/yy des
(vii) HRA 30/10 C surf xx/yy des
(viii) HRA 35/14 C surf xx/yy des
(ix) HRA 55/10 C surf xx/yy des
(x) HRA 55/14 C surf xx/yy des

Unless otherwise specified in Appendix 7/1, the grade of bitumen required (xx/yy) shall be 40/60.

Coarse Aggregate

2 The resistance to polishing of the coarse aggregate for chipped mixtures shall be category PSV_{44} as defined in BS EN 13043, clause 4.2.3. For unchipped mixtures, the coarse aggregate shall have a minimum declared PSV and a maximum AAV as specified in Appendix 7/1.

Coated Chippings

3 When required, coated chippings shall be either 14/20 mm or 8/14 mm in accordance with BSI PD 6682-2, as specified in Appendix 7/1. Coated chippings shall also comply with Clause 915.

912 Close Graded Asphalt Concrete Surface Course

1 Close graded asphalt concrete (formerly macadam) surface course recipe mixes shall be asphalt concrete conforming to BS EN13108-1, the detailed requirements of BSI PD 6691 Annex B and requirements specified in Appendix 7/1. The mixture designation shall be one of the following:

(i) AC 10 close surf 100/150
(ii) AC 10 close surf 70/100
(iii) AC 14 close surf 100/150
(iv) AC 14 close surf 70/100

Coarse Aggregate

2 To ensure adequate resistance to polishing and abrasion, the coarse aggregate shall have a minimum declared PSV and a maximum AAV, as specified in Appendix 7/1.

913 not used

914 Fine Graded Asphalt Concrete Surface Course

1 Fine graded asphalt concrete (formerly macadam) surface course recipe mixes shall be asphalt concrete conforming to BS EN13108-1, the detailed requirements of BSI PD 6691 Annex B and requirements specified in Appendix 7/1. The mixture designation shall be one of the following:

(i) AC 4 fine surf 160/220
(ii) AC 4 fine surf 250/330

Interim Advice

Coarse Aggregate

2 To ensure adequate resistance to polishing and abrasion, the coarse aggregate shall have a minimum declared PSV and a maximum AAV, as specified in Appendix 7/1.

915 Coated Chippings for Application to Hot Rolled Asphalt Surfacings

1 Coated chippings for rolling into the surface of hot rolled asphalt shall conform to BS EN13108-4, the detailed requirements in BSI PD 6691 Annex C clause C.2.8.2 and requirements specified in Appendix 7/1.

2 To ensure adequate resistance to polishing and abrasion, the coarse aggregate shall have a minimum declared PSV and a maximum AAV, as specified in Appendix 7/1.

3 The shape of the chippings shall comply with category FI_{20} as defined in BS EN 13043 clause 4.1.6.

916 Open Graded Asphalt Concrete Surface Course

1 Open graded asphalt concrete (formerly macadam) surface course recipe mixes shall be asphalt concrete conforming to BS EN13108-1, the detailed requirements of BSI PD 6691 Annex B and requirements specified in Appendix 7/1. The mixture designation shall be one of the following:

(i) AC 10 open surf 160/220
(ii) AC 10 open surf 100/150
(iii) AC 10 open surf 70/100
(iv) AC 14 open surf 160/220
(v) AC 14 open surf 100/150
(vi) AC 14 open surf 70/100

Aggregate

2 To ensure adequate resistance to polishing and abrasion, the coarse aggregate shall have a minimum declared PSV and a maximum AAV, as specified in Appendix 7/1.

917 not used

918 Slurry Surfacing Incorporating Microsurfacing

1 The Contractor shall be responsible for the design of the Slurry Surfacing, choice of materials, techniques and processes based on site and traffic data specified in Appendix 7/7 and the schedule of constraints on site availability in Appendix 1/13.

2 The Contractor shall:

(i) Provide a Design Proposal to achieve the performance requirements in terms of texture and maximum levels of defects as set out in this Clause and in Appendix 7/7 ensuring that the Slurry Surfacing has an initial stability such that it is capable of withstanding the normal traffic for the site when first opened.
(ii) State the Estimated Design Life of the Slurry Surfacing in the Design Proposal.
(iii) The contractor shall be registered to the BS EN ISO 9001 'Sector Scheme for Slurry Surfacing' described in Appendix A.
(iv) Provide a Quality Plan containing the information required by the 'Sector Scheme for Slurry Surfacing' described in Appendix A.
(v) Carry out the Slurry Surfacing in accordance with the Design Proposal to the thickness and tolerances specified in Appendix 7/7.

Interim Advice

3 The Contractor shall guarantee the design, materials and workmanship against defects and against failure to meet the end performance requirements for a period of two years, or as otherwise specified in Appendix 7/7, from the date of completion of the work. The Overseeing Organisation will monitor the performance levels of the Slurry Surfacing during the guarantee period, and bring any defects to the attention of the Contractor.

The System

4 The proposed Slurry Surfacing shall have been subject to a Type Approval Installation Trial (TAIT) in accordance with BS EN 12273 or as otherwise approved by the Overseeing Organisation. The Contractor shall provide, with his Design Proposal, a Data Sheet giving details of the properties of each system proposed, including the data specified in this Clause and in Appendix 7/7.

Mixture Tests

5 The Contractor shall provide the data specified in Appendix 7/7 and such other data as he may consider useful, to enable the Overseeing Organisation to assess the suitability of his product for the sites to be treated.

Aggregates

6 The aggregate shall be crushed rock, slag, gravel or calcined bauxite, complying with this specification. The coarse aggregate shall have a minimum declared PSV and a maximum AAV as specified in Appendix 7/7. In the Design Proposal the Contractor shall state the aggregate characteristics and sources to be used and provide an example of the target grading curve and binder content and details of the proposed filler and fibre if used. The grading and binder content shall not differ from the proposed target values by more than the tolerances detailed in the Design Proposal.

Binder

7 The Contractor shall provide, with his Design Proposal, a Binder Data Sheet giving details of the properties of each binder proposed, including those specified in Appendix 7/7. The recovery of the binder shall be carried out in accordance with Clause 923. The test to determine Vialit Pendulum Cohesion shall be carried out in accordance with Clause 939. The Contractor shall provide rheological product identification data for modified binders in accordance with Clause 928.

Coloured Materials

8 Where required in Appendix 7/7 a coloured slurry surfacing shall be provided. All coloured slurry surfacings shall be approved by the Overseeing Organisation. They shall conform in all respects with the requirements of this Clause.

Equipment

9 The Slurry Surfacing Machine, when used, shall be capable of uniform application and the provision of a continuous surface without ridges or segregation.

Health and Safety

10 Health and Safety information and safe handling guidance shall be provided.

Layer Thickness

11 When required the minimum and/or maximum thickness of the Slurry Surfacing shall be as specified in Appendix 7/7.

Preparation

12 Any necessary remedial works to the road surface and structure shall be completed either prior to the commencement of works, or as part of the Contract and agreed as

acceptable by the Overseeing Organisation and the Contractor before Slurry Surfacing commences.

13 Street furniture, and where specified in Appendix 7/7 road markings and kerbs, shall be masked using self-adhesive masking material or other material firmly secured against the passage of the spreader box or the tools used for hand laying. Any packed mud or other deposits on the road surface shall be removed, all organic growth shall be removed by suitable means, and the road surface shall be swept free of all loose material.

14 A Bond Coat shall be applied prior to the Slurry Surfacing with or without grit or chippings in order to seal the existing substrate and to enhance the bond to the existing road surface unless the contractor can demonstrate that sufficient bond will be developed without its use. This treatment shall be in accordance with Clause 920 and the Contractor's method statement contained within his Design Proposal.

Traffic Safety and Management

15 Traffic Safety and Management for motorways and trunk roads shall be strictly in accordance with the requirements of Series 100 and any site specific additional requirements specified in Appendix 1/13.

Mixing

16 The Slurry Surfacing shall be mixed in a continuous flow mixing machine and discharged directly into the spreader box. Where the material is to be hand laid the Slurry Surfacing may be mixed in a batch mixer or supplied to site pre-mixed in suitable containers. The Quality Plan will detail the precautions to be taken to achieve a homogeneous mixture.

Application

17 Application restrictions to be observed in the event of adverse weather shall be as specified in this Clause, the Contractor's Method Statement and any additional requirements specified in Appendix 7/7.

18 Transverse joints shall be formed with spreading starting and finishing on a protective strip not less than 100 mm wide at each end of the lane length or area being treated or such other method as defined in the Contractor's Method Statement to produce an equivalent standard. Transverse joints shall be formed such that there shall be no ridges or bare strips.

19 Unless otherwise agreed with the Overseeing Organisation, longitudinal joints, where the material is laid on a road, shall coincide with lane markings. Longitudinal joints shall be formed such that there shall be no ridges or bare strips.

20 Handwork around street furniture and other ironwork should meet the same performance requirements and form a homogeneous surface with the rest of the treated carriageway.

21 Footways and other confined areas may be spread by hand using squeegees and brooms. Kerb edges and other areas not being treated shall be suitably masked with self-adhesive masking material. Footways shall be finished by dragging a dampened broom transversely over the footway under its own weight or other method producing a similar macrotexture or as stated in Appendix 7/7.

22 All voids, cracks and surface irregularities shall be completely filled. Spreading shall not be undertaken on carriageways when the temperature falls below 4 C or when standing water is present on the surface. In warm dry weather, the surface immediately ahead of the spreading, shall be slightly damped by mist water spray applied mechanically, or for hand

laying by a hand operated pressure sprayer, unless otherwise agreed by the Overseeing Organisation.

23 The finished Slurry Surfacing shall have a uniform surface macrotexture throughout the work, without variations of macrotexture within the lane width, or from area to area.

24 The finished surface shall be free from blow holes and surface irregularities due to scraping, scabbing, score marks, dragging, droppings, excess overlapping or badly aligned longitudinal or transverse joints, damage by rain or frost, or other defects which remain 24 hours after laying. Slurry Surfacing which does not comply with this Clause or is non-uniform in surface macrotexture or colour, 24 hours after laying shall be rectified by removal and replacement, or superimposed if this is impractical, with fresh material in compliance with this Clause. Areas so treated shall be not less than 5 m long and not less than one lane wide (or the full width if less than a lane wide). All areas being worked on shall be kept free of traffic until the material has set sufficiently to carry the traffic.

25 The Contractor shall record the amount of Slurry Surfacing used and the area covered for each run or section completed.

26 The Contractor shall facilitate duplicate or joint testing by the Overseeing Organisation if required.

Aftercare

27 Masking shall be removed after the Slurry Surfacing has been applied, without damage to the edge of the surfacing, and before opening the road or footway to traffic. The ironwork shall be reset, if necessary, within 48 hours of application of the Slurry Surfacing.

28 The Contractor shall remove surplus aggregate from the treated areas using a method stated in the Quality Plan. The Contractor shall monitor the Slurry Surfacing closely for a minimum period of 2 hours and if necessary the lane shall be swept again. The monitoring shall continue until the Slurry Surfacing has reached sufficient stability to carry unrestricted traffic. If there are signs of distress the Contractor shall reinstate traffic safety and management procedures or other such remedial action where necessary in order to prevent further damage.

29 Further operations to remove subsequently loosened aggregate shall be carried out over the next 48 hours. The areas treated and adjacent side roads, footways and paved areas shall be kept substantially free of loose aggregate for a period of 30 days after completion of the work.

As Built Manual

30 Not more than 30 days after completion of the work the Contractor shall provide a record of the progress of the work in the form of an As Built Manual incorporating all relevant information, including all test results, volumes of Slurry Surfacing used and areas covered with calculated thickness, record of traffic control carried out, weather information, unforeseen problems, a list of complaints, if any, from the general public or road users and any other information that the Overseeing Organisation may reasonably require to be included.

Performance Standards for Slurry Surfacing During the Guarantee Period
Surface Macrotexture

31 The Contractor is responsible for maintaining the surface macrotexture requirements set out in Appendix 7/7 throughout the guarantee period. The Overseeing Organisation will monitor the surface macrotexture.

Withdrawn

The definitive test is the volumetric patch technique measured in accordance with BS EN 13036-1 except that 10 individual measurements shall be made on the nearside (inside) wheel-track of the most heavily trafficked lane or for low traffic category sites the track carrying the most stress. The average macrotexture depth of each lane kilometre, or the complete carriageway lane where this is less than 1000 metres, shall be as specified in Appendix 7/7. The average of each set of 10 individual measurements shall be not less than 80% of the minimum permitted.

The Overseeing Organisation will use the TRAffic-speed Condition Survey (TRACS) or other suitable equipment to determine the Sensor Measured Texture Depth (SMTD) for high-speed roads. Measurements of SMTD shall be made in the nearside and offside wheel-tracks of all lanes. For other roads where road closure is less critical the volumetric patch technique or other measuring device such as the mini texture meter may be used.

The SMTD or results from other devices shall be calibrated for the particular Slurry Surfacing product design and condition against volumetric patch values to provide the Volumetric Patch Equivalent value. The macrotexture depths will be measured, initially, then after 11 months and before 13 months and for two year guarantee period contracts additionally after 22 months and before 24 months unless otherwise specified in Appendix 7/7. When required, the Contractor shall design the Slurry Surfacing to limit the maximum macrotexture after four weeks trafficking to that specified in Appendix 7/7.

Surface Profile

32 The surface profile of the slurry surfacing, when measured in accordance with Series 700, shall meet the requirements specified in Appendix 7/7 for both transverse and longitudinal profile.

Defects

33 The extent of area and linear defects will be monitored by the Overseeing Organisation using the visual method of assessment in accordance with BS EN 12274-8 and shall have less than the permitted maximum level of defects as described in Appendix 7/7.

34 Coloured materials shall retain their colour, to at least to the level detailed in the Certificate throughout the guarantee period.

35 Any section failing to meet the required standard as specified in Appendix 7/7 shall be subject to remedial action by the Contractor.

919 Surface Dressing: Recipe Specification

1 The Contractor shall:

(i) Carry out the Surface Dressing in accordance with the Overseeing Organisation's design described in Appendix 7/21 subject to the schedule of constraints on site availability set out in Appendix 1/13. The supply and application of Surface Dressing to road surfaces shall comply with the National Sector Scheme for Surface Dressing described in Appendix A.

(ii) Be responsible for the choice of materials, techniques and processes subject to the requirements described in Appendix 7/21. The tolerances permitted for this work shall be as specified in Appendix 7/21.

(iii) Provide a Quality Plan, which may be subject to audit by the Overseeing Organisation with respect to the method of executing the work.

(iv) Guarantee the materials and workmanship against defects and against failure to meet the specification for a period of one year, or as otherwise described in Appendix 7/21, from the date of completion of the work..

Materials and Equipment – Binder

2 The binder shall be of the type and grade specified in the design. Modified binders shall be Intermediate, Premium or Super-premium Grade, having a British Board of Agrément HAPAS Roads and Bridges Certificate as stated in Appendix 7/21. Conventional binders shall be bitumen emulsions complying with BS EN 13808, fluxed and cut-back bitumen binders shall only be used when approved by the Overseeing Organisation.

3 The Contractor shall provide a Binder Data Sheet giving details of the properties of each binder proposed, including those specified in Appendix 7/21. The recovery of the binder shall be carried out in accordance with Clause 923. The test to determine the Vialit Pendulum Cohesion shall be carried out in accordance with Clause 939. The Contractor shall provide rheological product identification data for modified binders in accordance with Clause 928. Health and Safety information and a safe handling guide from the manufacturer shall be provided together with details of any weather restrictions placed upon the use of the binder.

4 The binder sprayer shall be capable of uniform application at the designed rate of spread over a variable or fixed width sufficient to allow a full lane width to be produced in a single pass. Before spraying begins the Contractor shall provide the Overseeing Organisation with a test certificate showing test results for rate of spread and accuracy of spread of binder carried out in accordance with the test methods in BS EN 12272-1 issued by, an appropriate organisation, accredited in accordance with sub-Clauses 105.3 and 105.4 for those tests, or tests under his own Quality Assurance Scheme, demonstrating that the binder sprayer has been tested, using the binder to be used in the Contract, not more than six weeks before the commencement of the work, and that it complies with the requirements set out in Appendix 7/21.

Materials and Equipment - Chippings

5 The chippings shall be crushed rock, slag, gravel or calcined bauxite complying with BS EN 13043, and be of the size specified in Appendix 7/21. In his proposals, the Contractor shall state the source and characteristics of chippings to be used and the coating, if any. The coarse aggregate shall have a minimum declared PSV and a maximum AAV as specified in Appendix 7/21. The shape of the chipping shall comply with category FI_{20} as defined in BS EN 13043, clause 4.1.6, tested at frequency specified in Appendix 1/5.

6 The chipping spreader shall have controlled metering and be capable of variable or fixed width application to match the binder sprayer. Before a spreader is used, the Contractor shall provide to the Overseeing Organisation a test certificate showing test results for rate of spread and accuracy of spread of chippings in accordance with the test methods in BS EN 12272-1 issued by an appropriate organisation, accredited in accordance with sub-Clauses 105.3 and 105.4 for those tests, or tests carried out under his own Quality Assurance Scheme demonstrating that the chipping spreader has been tested, using chippings similar to those to be used in the Contract, not more than six weeks before the commencement of the work, and that it complies with the requirements set out in Appendix 7/21.

Preparation

7 Any necessary remedial works to the road surface and structure shall be completed either prior to commencement of the works, or as part of the Contract and agreed as acceptable by the Overseeing Organisation and the Contractor before Surface Dressing commences.

8 Before binder is applied, street furniture shall be masked using self-adhesive masking material. Oil, sand or similar materials shall not be used. Any packed mud or other deposits

on the road surface shall be removed, and the road surface shall be swept free of all loose material.

9 Traffic Safety and Management for motorways and trunk roads shall be in accordance with the requirements of Series 100 and any site specific additional requirements specified in Appendix 1/13.

Application

10 Binder shall be applied to the road surface at the rates specified in the design. The Contractor shall mark out areas where an adjusted binder rate is needed, because of localised conditions and note such changes in the As Built Manual. Application restrictions to be observed in the event of adverse weather shall be as specified below together with any additional limitations set out in Appendix 7/21.

(i) When there is precipitation.
(ii) When there is free water on the surface.
(iii) When the air temperature is at or below the values given in Table 9/2.
(iv) For emulsion binders when the relative humidity exceeds 80%.
(v) When the road surface temperature exceeds 35°C for roads carrying over 200 cv/lane/day or 40°C below that traffic level.

TABLE 9/2: Air Temperature for Spraying

Binder	*Uncoated chippings*	*Coated chippings*
	Minimum °C	Minimum °C
Cut-back bitumen 50 sec	10	8
Cut-back bitumen 100 sec	15	10
Cut-back bitumen 200 sec	18	13
Bitumen emulsion	10	--
All modified binders and fluxed binders	Manufacturer's recommendation	Manufacturer's recommendation

11 Transverse joints shall be formed with spraying starting and finishing on a protective strip not less than 1 metre wide at each end of the lane length being treated. Transverse joints shall be of binder overlap only and not wider than 100 mm. There shall be no ridges or bare strips.
Longitudinal joints shall coincide with lane markings. Longitudinal joints shall be of binder overlap only while ensuring that the proposed rate of spread is achieved across the joint. For quartering (using a part of the spraybar) the overlap may be extended to a maximum of 300 mm. There shall be no ridges or bare strips.

12 The Contractor shall carry out the tests for rates of spread and accuracy of application of binder and chippings in accordance with the test methods in BS EN 12272-1 at the frequency specified in Appendix 1/5 and report the results verbally to the Overseeing Organisation within 24 hours of carrying out the test and confirm in writing within 7 days. The Contractor shall facilitate duplicate testing by the Overseeing Organisation if required.

13 Rolling shall be performed by rubber coated vibratory steel rollers and/or pneumatic tyred rollers as specified in Clause 901. The rollers shall have fully operating sprinkler systems, spraying water or other release agent onto the drum or tyres, so that if the

chippings start to move under the roller exposing binder the sprinklers are available immediately.

Aftercare

14 Masking shall be removed after the Surface Dressing has been applied and before opening the road to unrestricted traffic. The Contractor shall remove surplus chippings from the road by suction sweeping before it is opened to unrestricted traffic.

15 The Contractor shall monitor the Surface Dressing closely for a minimum period of 2 hours, or as specified in Appendix 7/21, after the road is opened to traffic. The Contractor shall reinstate traffic safety and management procedures or institute other remedial action where necessary, such as dusting, if there are signs of distress, such as turning of the chippings, in order to prevent further damage to the Surface Dressing.

16 Further operations to remove subsequently loosened chippings shall be carried out over the next 48 hours. The road, and adjacent side roads, footways and paved areas, shall be kept substantially free of loose chippings for a period of 30 days after completion of the work.

17 Any defects arising from deficiencies in the materials, workmanship and aftercare manifest during or at the end of the maintenance period shall be rectified by the Contractor at his own expense.

As Built Manual

18 Not more than 30 days after completion of the work the Contractor shall provide a record of the progress of the work in the form of an As Built Manual incorporating all relevant information, including all test results; variations to the design and those necessitated by localised site conditions; weather information; unforeseen problems; a list of complaints, if any, from the general public or road users; and any such other information that the Overseeing Organisation may reasonably require to be included.

920 Bond Coats, Tack Coats and other Bituminous Sprays

1 Bond coats and tack coats used in conjunction with bituminous mixtures, other than those covered by Clause 942, shall be in accordance with this Clause and the requirements specified in Appendix 7/1 and 7/4.

Bond Coats

2 Bond coats shall have a British Board of Agrément HAPAS Roads and Bridges Certificate. In the event that no such certificates have been issued, they shall have the approval of the Overseeing Organisation.

Tack Coats

3 Tack coats for bituminous mixtures shall be bitumen emulsion, as specified in BS 594987.

Bituminous Sprays

4 Bituminous sprays used to facilitate sealing and curing shall consist of either bitumen emulsion to BS EN 13808; cutback bitumen to BS 3690-1; paving grade bitumen to BS EN 12591 supplied from locations that are registered to BS EN ISO 9001 ‘Sector Scheme for the Supply of Paving Grade Binders’, described in Appendix A; or modified bituminous products with a British Board of Agrément HAPAS Roads and Bridges Certificate. In the event that no such certificates have been issued, modified bituminous products shall have the approval of the Overseeing Organisation.

Manufacture and Product Data

5 Bond coats, tack coats and bituminous sprays shall be manufactured in plants operating under a system conforming to the requirements of BS EN ISO 9001. The Contractor shall complete the binder data sheet specified in Appendix 7/4 and supply a copy to the Overseeing Organisation prior to the application of the product.

Preparation

6 Any limitations on area availability and timing or other constraints for the work shall be as specified in Appendix 1/13. Before spraying is commenced, the surface shall be free of all loose material and standing water. Surface preparation shall be carried out in accordance with BS 594987, or for certified products, in accordance with the BBA/HAPAS Certificate; and shall comply with any requirements specified in Appendix 7/4. When specified in Appendix 7/4, street furniture, ironwork and drop-kerbs shall be masked using self-adhesive masking material before application starts and removed prior to the completion of the works.

Application

7 Application shall be by metered mechanical spraying equipment, spray tanker or spraying device integral with the paving machine. The spraying equipment used shall not cause permanent deformation in the surface. For small or inaccessible areas, application may be by hand held sprayer with the agreement of the Overseeing Organisation.

Rate of Spread

8 The target rates of spread of bond coats or tack coats below bituminous mixtures shall be as recommended in BS 594987. For other applications, unmodified bitumen emulsions shall be sprayed at the rate of spread specified in BS 434-2 or as otherwise stated in Appendix 7/4. Proprietary materials shall be sprayed at the appropriate rate set out in the BBA/HAPAS Certificate for the product.

Accuracy of Application

9 Spray application shall be uniform. Before spraying begins, the Contractor shall provide the Overseeing Organisation with a test certificate showing the results for rate of spread and accuracy of spread. These tests shall be carried out in accordance with BS EN 12272-1 either by an appropriate organisation, accredited in accordance with sub-Clauses 105.3 and 105.4 for those tests, or by the Contractor where this forms part of his Quality Plan. The certificate shall demonstrate that the spraying device has been tested, using the product to be used in the Contract, not more than six weeks before commencement of the work. The tolerance on the specified rate of spread shall not exceed ±20% and the coefficient of variation of the transverse distribution shall not exceed 15%. During the works the Contractor shall repeat the tests for rate of spread and accuracy of application at the frequency specified in Appendix 1/5. The results shall be reported verbally to the Overseeing Organisation within 24 hours of carrying out a test and in writing within 7 days. Where application is by hand held sprayer, the rate of spread shall be measured by calculating the volume applied per square metre and evenness shall be visually assessed.

Joints

10 There shall be no bare strips or areas having less than the minimum permitted rate of spread. Transverse joints shall have an overlap not wider than 300 mm. Longitudinal joints shall have an overlap to ensure that the minimum permitted rate of spread is achieved across the joint. For quartering (using part of the spraybar) the longitudinal joint overlap width may be extended to a maximum of 300 mm. Paver integral sprayers shall provide a wet edge to ensure spray overlap under adjacent overlays such that the minimum permitted rate of spread is achieved across the longitudinal joint. Where the longitudinal spray overlap causes the effective rate of spread to be increased by more than 50% of the specified rate,

then the width of overlap shall not be greater than 100 mm and shall be outside the location of the wheel tracks for the lane.

Overlaying Concrete Surfaces

11 The Contractor shall submit evidence of the suitability of the bond or tack coats he intends to use when overlaying concrete surfaces to the Overseeing Organisation prior to the commencement of the work.

Blinding Material for Bituminous Sprays

12 When specified in Appendix 7/4, blinding material shall consist of hard clean crushed fine aggregate or slag fine aggregate or sand containing not more than 15% by mass retained on a 6.3 mm sieve. It shall be distributed over the sprayed area and left. Blinding used on cementitious materials shall be light in colour to minimise solar gain. All loose material on a sprayed surface including non-adhered blinding material shall be removed prior to the application of an overlay.

Chipping to Prevent Binder Pickup

13 When chippings are used to prevent tack or bond coat pickup on vehicle tyres, they shall consist of hard, clean aggregate 2/4 mm or 2/6 mm Gc 85/35. The rate of application of aggregate shall be the minimum necessary and shall be distributed by metered mechanical means. Bond coat shall be visible after aggregate application to ensure bond is still achieved between the pavement layers.

921 Surface Macrotexture of Bituminous Surface Courses

1 The initial surface macrotexture for bituminous surface courses shall be measured using the volumetric patch method described in BS EN 13036-1 and the procedures in BS 594987, clause 8.2. The sand patch method in BS598-105 (now withdrawn) may be used for routine monitoring, but the BS EN 13036-1 method shall be used as the reference method in case of dispute.

2 Texture depth shall be measured by 10 individual measurements taken at approximately 5 m spacing along a diagonal line across the lane width. Unless otherwise specified in Appendix 7/1, at least one set of 10 measurements shall be made for each 250 m section of carriageway lane. The average texture depth for each set of 10 individual measurements and the average texture depth of each 1000 m section (or complete carriageway lane where this is less than 1000 m) shall not be less than the appropriate values shown in Table 9/3, unless otherwise specified in Appendix 7/1.

Table 9/3: Requirements for Initial Texture Depth

Road Type	Surfacing Type	Average per 1000 m section, mm	Average for a set of 10 Measurements, mm
High speed roads 85th percentile speed of traffic > 50 miles/hr (80 km/hr)	Thin surface course systems to Clause 942 with an upper (*D*) aggregate size of 14mm or less:	Not less than 1.3	Not less than 1.0
	Chipped hot rolled asphalt, surface dressing and all other surfacings:	Not less than 1.5	Not less than 1.2
Lower speed roads **All roundabouts** 85th percentile speed of traffic < 50 miles/hr (80 km/hr)	All surface course materials	Not less than 1.2	Not less than 1.0

922 Surface Dressing: Design, Application and End Product Performance

1 The Contractor shall be responsible for the design of the Surface Dressing, choice of materials, techniques and processes based on site and traffic data specified in Appendix 7/3 and the schedule of constraints on site availability in Appendix 1/13.

2 The Contractor shall:

(i) Provide a Design Proposal to achieve the performance requirements in terms of macrotexture and maximum levels of defects as set out in this Clause and in Appendix 7/3 ensuring that the Surface Dressing has an initial stability such that it is capable of withstanding the normal traffic for the site when first opened.
(ii) State the Estimated Design Life of the Surface Dressing in the Design Proposal.
(iii) Be registered to the BS EN ISO 9001 'Sector Scheme for Surface Dressing', described in Appendix A.
(iv) Provide a Quality Plan containing at least the information required by the Sector Scheme for Surface Dressing, described in Appendix A.
(iv) Carry out the Surface Dressing in accordance with BS EN 12271 and the Design Proposal to the tolerances specified in Appendix 7/3.

3 The Contractor shall guarantee the design, materials and workmanship against defects and against failure to meet the end product performance requirements for a period of two years, or as otherwise specified in Appendix 7/3, from the date of completion of the work. The Overseeing Organisation will monitor the performance levels of the surface dressing during the guarantee period, and bring any defects to the attention of the Contractor.

The System

4 The proposed Surface Dressing shall have been subject to a Type Approval Installation Trial (TAIT) in accordance with BS EN 12271, which shall be self-certified within the quality management scheme described in Appendix A. The TAIT shall have been carried out on a site with similar characteristics and traffic category to that to be treated in the Contract. The Contractor shall provide, with his Design Proposal, a Data Sheet giving details of the properties of each system proposed, including the data specified in this Clause and in Appendix 7/3.

Materials and Equipment - Binder

5 Modified binders shall be Intermediate, Premium or Super-premium Grade, having a British Board of Agrément HAPAS Roads and Bridges Certificate as stated in Appendix 7/3. Conventional binder shall be bitumen emulsion complying with BS EN 13808, except where cut-back bitumen and fluxed binders have been specifically approved by the Overseeing Organisation.

6 The Contractor shall provide, with his Design Proposal, a Binder Data Sheet giving details of the properties of each binder proposed, including those specified in Appendix 7/3. The recovery of the binder shall be carried out in accordance with Clause 923. The test to determine Vialit Pendulum Cohesion shall be carried out in accordance with Clause 939. The Contractor shall provide rheological product identification data for modified binders in accordance with Clause 928. The data provided shall be not more than 6 months old and obtained on samples of binder representative of binder manufactured and supplied using the same source and processes as the proposed binder. Health and Safety information and a safe handling guide from the manufacturer shall be provided together with details of any weather restrictions placed upon use of the binder.

7 The binder application shall be uniform and for motorways, trunk roads and heavily trafficked and highly stressed roads, shall be of sufficient width to allow a full lane to be dressed in a single pass. Before spraying begins, the Contractor shall provide the Overseeing Organisation with a test certificate showing test results for rate of spread and accuracy of spread of binder carried out in accordance with the test methods in BS EN 12272-1 and issued by, an appropriate organisation, accredited in accordance with sub-Clauses 105.3 and 105.4 for those tests, or tests carried out under his own Quality Assurance Scheme, demonstrating that the binder sprayer has been tested, using the binder to be used in the Contract, not more than six weeks before the commencement of the work, and that it complies with the requirements set out in Appendix 7/3.

Materials and Equipment - Chippings

8 The chippings shall be crushed rock, slag, gravel or calcined bauxite complying with the general requirements of BS EN 13043. The aggregate shall have a minimum declared PSV and a maximum AAV as specified in Appendix 7/3.

9 Chipping spreaders shall have controlled metering and be capable of variable or fixed width application to match the binder sprayer. Before a spreader is used, the Contractor shall provide the Overseeing Organisation with a test certificate showing test results for rate of spread and accuracy of spread of chippings carried out in accordance with the test methods in BS EN 12272-1, and issued by an appropriate organisation, accredited in accordance with sub-Clauses 105.3 and 105.4 for those tests, or tests carried out under his own Quality Assurance Scheme, demonstrating that the chipping spreader has been tested, using chippings similar to those to be used in the Contract, not more than six weeks before the commencement of the work, and that it complies with the requirements set out in Appendix 7/3.

Preparation

10 Any necessary remedial works to the road surface and structure shall be completed prior to or as part of the Contract and agreed as acceptable by the Overseeing Organisation and the Contractor before Surface Dressing commences.

11 Before binder is applied, street furniture shall be masked using self-adhesive masking material. Oil, sand or similar materials shall not be used. Any packed mud or other deposits on the road surface shall be removed, and the road surface shall be swept free of all loose material.

Traffic Safety and Management

12 Traffic Safety and Management for trunk roads and motorways shall be in accordance with the requirements of Series 100 and any site specific additional requirements specified in Appendix 1/13.

Application

13 Restrictions to be observed in the event of adverse weather shall be as specified in Appendix 7/3. Transverse joints shall be formed with spraying starting and finishing on a protective strip not less than 1 metre wide at each end of the lane length being treated. Transverse joints shall be of binder overlap only and not wider than 100 mm. There shall be no ridges or bare strips. Longitudinal joints shall coincide with lane markings. Longitudinal joints shall be of binder overlap only, while ensuring that the proposed rate of spread is achieved across the joint, for quartering (using a part of the spraybar) the overlap may be extended to a maximum of 300 mm. There shall be no ridges or bare strips.

14 The Contractor shall carry out the tests for rates of spread and accuracy of application of binder and chippings in accordance with the test methods in BS EN 12272-1 at the frequency specified in Appendix 1/5 and report the results verbally to the Overseeing

Organisation within twenty-four hours of carrying out the test and confirm in writing within seven days. The Contractor shall facilitate duplicate testing by the Overseeing Organisation if required.

Aftercare

15 Masking shall be removed after the Surface Dressing has been applied and before opening the road to unrestricted traffic. The time period before unrestricted traffic may use the Surface Dressing shall not exceed that specified in Appendix 7/3. The Contractor shall remove surplus chippings from the road by suction sweeping before it is opened to unrestricted traffic.

16 The Contractor shall monitor the Surface Dressing closely for a minimum period of 2 hours, or as specified in Appendix 7/3, after the road is opened to traffic. The Contractor shall reinstate traffic safety and management procedures or other such remedial action where necessary, such as dusting, if there are signs of distress, such as turning of the chippings, in order to prevent further damage to the Surface Dressing.

17 Further operations to remove subsequently loosened chippings shall be carried out over the next 48 hours. The road, and adjacent side roads, footways and paved areas, shall be kept substantially free of loose chippings for a period of 30 days after completion of the work.

As Built Manual

18 Not more than 30 days after completion of the work the Contractor shall provide a record of the progress of the work in the form of an As Built Manual incorporating all relevant information, including: all test results; variations to the Design Proposal and those necessitated by localised site conditions; a record of traffic control carried out; weather information; unforeseen problems; a list of complaints, if any, from the general public or road users; and any other information that the Overseeing Organisation may reasonably require to be included.

Performance Standards During the Guarantee Period
Surface Macrotexture

19 The Contractor is responsible for maintaining the surface macrotexture requirements set out in Appendix 7/3 throughout the guarantee period. The Overseeing Organisation will monitor the surface macrotexture.

The definitive test is the volumetric patch technique measured in accordance with BS EN 13036-1 except that 10 individual measurements shall be made on the nearside (inside) wheel-track of the most heavily trafficked lane or for low traffic category sites the track carrying the most stress. The average macrotexture depth of each lane kilometre, or the complete carriageway lane where this is less than 1000 metres, shall be as specified in Appendix 7/3. The average of each set of 10 individual measurements shall be not less than 80% of the minimum permitted.

The Overseeing Organisation will use the TRAffic-speed Condition Survey (TRACS) or other suitable equipment to determine the Sensor Measured Texture Depth (SMTD) for motorway, trunk roads and heavily trafficked and highly stressed roads. Measurements of SMTD shall be made in the nearside and offside wheel-tracks of all lanes. For other roads where road closure is less critical the volumetric patch technique or other measuring device such as the Mini Texture Meter may be used.

The SMTD or results from other devices shall be calibrated for the particular Surface Dressing product design and condition against volumetric patch values to provide the Volumetric Patch Equivalent value. The macrotexture depths will be measured after 11

months and before 13 months and additionally for two year guarantee period contracts after 22 months and before 24 months unless otherwise specified in Appendix 7/3. When required, the Contractor shall design the Surface Dressing to limit the maximum macrotexture after four weeks trafficking to that specified in Appendix 7/3 and the macrotexture depths will be measured, for this purpose, between three weeks and five weeks after completion of the Works.

Defects

20 The extent of chipping loss or other defects will be monitored by the Overseeing Organisation using a visual method of assessment. The performance standard is that any section of the Works shall be deemed as having failed if the areas of defects do not comply with the classes specified in Appendix 7/3. If there is a failed section, the Contractor will be invited to inspect the site in order to agree remedial measures.

In the event that the Contractor and Overseeing Organisation are unable to reach agreement on whether a section has failed by qualitative visual assessment described in BS EN 12272-2, the level of defects shall be determined in accordance with the quantitative test methods in BS EN 12272-2. Any section failing to meet the required standard as specified in Appendix 7/3 shall be subject to remedial action by the Contractor after agreement of the Overseeing Organisation.

923 Binder Recovery using the Rapid Recovery Test (RRT) and Accelerated Ageing using the Modified Ageing Rolling Thin Film Oven Test (RTFOT)

Scope

1 This Clause specifies the procedure for obtaining a quantity of 'Recovered Binder' from modified or unmodified cutback or emulsion binder (Rapid Recovery Test - RRT) and an extended procedure for obtaining a quantity of 'Aged Binder' (Modified Ageing Rolling Thin Film Oven Test). 'Aged Binder' may be prepared directly from 'Recovered Binder' or from other binder samples. Binders used to manufacture hot mix asphalt are first subjected to a 'short term ageing test' (RTFOT) to simulate the effects of manufacture, transport and laying. The Modified Ageing RTFOT is suitable for all bituminous binders and rapidly provides homogeneous samples at different ages so that a plot of a relevant characteristic with ageing may be generated.

Definitions

2 For the purposes of the procedure specified in this Clause, 'Recovered Binder' shall be defined as: the material remaining after treatment of the original product under the conditions specified by the Rapid Recovery Test method (RRT). 'Aged Binder' shall be defined as: the material remaining after the Ageing protocol specified by the Modified Ageing RTFOT method.

Principle of the Rapid Recovery Test (RRT) for Bituminous Emulsions, Cutbacks or Fluxed Binders - Polymer Modified or Unmodified

3 A thin film of binder is rotated in polytetrafluoroethylene bottles using the rolling thin film oven test apparatus (RTFOT), as described in BS EN 12607-1, to evaporate water from bituminous emulsion and/or the light solvent or highly volatile fraction from cutback, fluxed or other binder. Special screws are used to disturb the binder and maintain a homogenous material during breaking and/or curing. Nitrogen gas instead of air is jetted over the film of emulsion, cutback or fluxed binder and a lower temperature is used in order to minimise ageing effects and simulate the condition of the binder soon after application (it is assumed that these binders when used are not subjected to the high temperature mixing associated with an asphalt plant where the appropriate test is the RTFOT using air at 163ºC).

Test Apparatus

4 The following test apparatus shall be used:

(i) RTFOT apparatus to BS EN 12607-1.

(ii) Eight identifiable bottles manufactured from polytetrafluoroethylene (PTFE) with threaded screw top lid (or other fixing system) with internal dimensions and aperture diameter (L2) as shown below:

Figure 1. PTFE Bottle

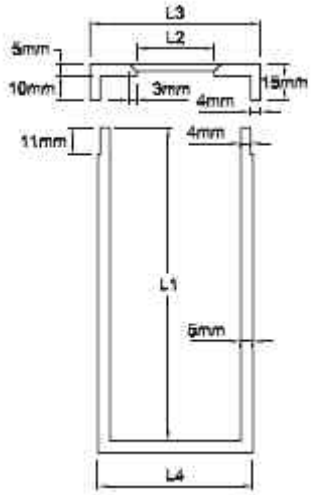

Bottle dimensions	
L1	129 ± 1.2 mm
L2	31.75 ± 1.2 mm
L3	70 ± 1.2 mm
L4	64.0 ± 1.2 mm
Note: All other dimensions are approximate. (11/04)	

The taper in throat is 45°+ 5°

(iii) Eight screws manufactured from high quality stainless steel (surgical quality) complying with BS EN 10088-3, designation 1.4404 to a 'fine machined finish'. All screws shall have dimensions: diameter 12.2 mm ± 0.2 mm and length 120 mm ± 0.5 mm and have between 20 and 21 turns with a pitch of 6 mm ± 0.2 mm. The depth of cut shall be 2 mm ± 0.2 mm with a semi-circular profile - see photograph. The minimum weight of a screw shall be 70 g. The direction of screw shall be such that the binder sample is drawn to the closed end of the bottle when the bottle containing the screw is rotated in the carousel;

Figure 2. Screw

(iv) A spatula for removing the binder from the bottle (a flat blade or paddle shape, see photograph, has been found suitable);

Figure 3. Spatula

(v) A balance accurate to 0.05g;
(vi) A timer capable of timing 100 minutes, accurate to 1 second in five minutes and for the Modified Ageing RTFOT a timer capable of timing 25 hours to the same accuracy;
(vii) Nitrogen gas supply and air supply;
(viii) An oven to pre-heat the bottles to the maximum storage temperature of the binder (for example 140 ºC ± 5ºC for cutback surface dressing binders);
(ix) A microwave oven of medium power to remove final traces of water from emulsion binders (650 watts has been found to be suitable).

Test Procedure for Recovery of Bituminous Emulsion, Cutback and Fluxed Binders

5 The test procedure for 'Recovery' of bituminous binders shall be as follows:

The RTFOT oven shall be set to maintain a temperature of 85 ºC ± 2ºC and the oven temperature allowed to stabilise.

The PTFE bottles (including lids) with stainless steel screws, shall each be weighed to 0.1 g and pre-heated in an oven to 85 ºC ± 2ºC.

The binder sample shall be freshly decanted from the thoroughly stirred main sample, which shall have been sampled in accordance with 'BS EN 58'. The temperature of the binder sample shall not be less than 70% of the normal application temperature in degrees Celsius and shall be recorded (for example high binder content surface dressing emulsion may require a minimum of 60 ºC or a polymer modified cutback binder 130 ºC). The sample history if known shall be recorded.

Any sub-sample, which shall be not less than 250 ml, shall be thoroughly stirred to ensure homogeneity immediately prior to decanting into the bottles, taking care to minimise loss of water content and/or any volatile oil. Gentle heating may be necessary to a maximum of the normal application temperature in order to obtain a homogenous sample.

19 g ± 0.5 g of binder sample shall be weighed out into each pre-heated bottle with screw. The weight of each bottle with screw and binder shall be recorded to 0.1 g.

Immediately after weighing the bottles with screws and binder sample they shall be rolled on the bench to ensure distribution of the binder round the bottle before mounting in the carousel of the pre-heated RTFOT apparatus.

Rotate the carousel with the nitrogen gas supply jet switched on, set up and calibrated as detailed in BS EN 12607-1. Nitrogen gas flow shall be 4,000 ± 200 ml/min.

Start the timer.

The period between weighing the bottles with binder and mounting of all the bottles and the start of the rotation of the carousel shall not exceed 20 minutes.

After 75 minutes ± 1 minute the rotating carousel shall be stopped and the time shall be noted.

Establishing the Microwave Heating Procedure for Bituminous Emulsions only (not needed if proceeding to the Modified Ageing RTFOT without sampling)
Remove two bottles with their screws and binder from the carousel, weigh them and record the weight loss to 0.1 g. Remove the screw from a bottle and return as much as possible of the binder sample clinging to the screw back into the bottle. The lids may need to be removed and replaced. Re-weigh the bottles. Place the two bottles with the binder sample and any reclaimed binder sample from their respective screws in the microwave oven together with a glass beaker containing water as a heat sink (around 200 ml has been found to be suitable to prevent spitting and overheating of the sample) and set a cycle time (two minutes has been found to be suitable in a medium power microwave). The cycle time shall be such that the temperature of the sample does not exceed 90 ºC as measured at the end of each cycle. After heating, re-weigh and record the weight loss as before. The time taken to weigh the bottles after the first cycle shall be recorded as the 'rest period' and used between further cycles (generally about two minutes). Cycles shall be repeated until the recorded weight loss is within 0.05 g of that of the previous cycle (generally just one or two cycles are required). Report the average percentage binder weight loss to 0.2%. Record the number of cycles and cycle time. The individual results shall be within 2.0% of the mean or the test repeated.

If the binder sample has been shown to possess a high flash point (greater than any localised temperature experienced in the test) and/or the screws are used in such a way as to minimise any risk of sparking or arcing (electrical discharge) then the screws may be left in the bottles during the microwave heating procedure.

Except where the bottles are to be subsequently used for the Modified Ageing RTFOT, remove the other six bottles from the carousel. Repeat the procedure as for the two bottles using the same rest period, but with one cycle time less. If an estimate of binder content is needed then record the weight loss to 0.1 g.

The whole of this procedure shall not exceed 30 minutes. If more binder from the same main sample is to be 'Recovered' then the procedure to establish the cycle time need not be repeated unless significant changes to the binder in storage are expected (for example the water content may change).

Note: It has been found to be advantageous to place the bottles on their sides in the microwave oven. This allows the binder to drain collecting to one side of the bottle, which is more easily removed with the scraper.

Test Procedure for Recovery of Bituminous Emulsion, Cutback and Fluxed Binders continued
The weight loss after 'Recovery' shall be recorded by weighing two bottles.

The 'Recovered Binder' shall be scraped from the bottles and screws.

Unless the 'Recovered Binder' is to be treated by the Modified Ageing RTFOT it shall be transferred, before it cools to ambient, to other test apparatus such as a Dynamic

Shear Rheometer (Clause 928) or Vialit Cohesion Pendulum Tester (Clause 939), in order to minimise further changes to the binder.

If the 'Recovered Binder' is to be stored or transferred to another location for testing, it shall be placed on a silicone sheet or in a warmed penetration pot (at a temperature not greater than 90 ºC) and the binder surface sealed using aluminium foil or other suitable material to prevent further loss of volatiles and minimise exposure to air. 'Recovered Binder' shall be stored at a temperature of between 0 ºC and 5 ºC.

During transfer 'Recovered' samples shall not be subjected to temperatures greater than ambient and the delay before testing shall not exceed 120 hours.

Re-heating for testing shall be in accordance with BS 2000: Part 72 except that the 'Recovered Binder' shall not be heated above 90 ºC unless absolutely necessary for the test. The thermal history shall be recorded.

Modified Ageing Rolling Thin Film Oven Test (RTFOT)
Principle of the Modified Ageing RTFOT

6 A thin film of binder is rotated in bottles using the rolling thin film oven test apparatus, as described in BS EN 12607-1. Special screws are used to disturb the binder and maintain a homogenous material during 'Ageing'. Air is jetted over the film of binder for a much longer period than in the conventional test and a lower temperature used in order to simulate the 'ageing' of the binder in the road after application. The binder tested may be 'Recovered Binder', or Binder after RTFOT, either using the procedure detailed in this Clause or BS EN 12607-1, or other binder sample.

The Modified Ageing RTFOT shall be carried out as follows:

Bituminous Emulsion, Cutback and Fluxed Binders
Stabilising

The bottles containing the samples after the Rapid Recovery Test, with screws remaining, shall be treated in the Modified Ageing RTFOT maintaining a temperature of (135 ºC ± 2 ºC) with the same nitrogen gas supply at 4000 ± 200 ml/min. After 1 hour ± 5mins two bottles shall be removed and shall be weighed to 0.1g. If the weight loss is less than 2.0% of the 'Recovered Binder' then the ageing protocol shall commence by switching to an air supply at 4000 ± 200 ml/min. If not then the bottles shall be placed back in the carousel with the nitrogen supply maintained and the weight loss recorded for these two bottles after each hour until the weight loss has stabilised to less than 2.0% of the previous binder weight.

If the same binder from the same main sample is to be 'Stabilised' after 'Recovery' then the procedure to establish the stabilising time need not be repeated unless there are expected significant changes to the binder sample in storage.

Ageing

The samples shall be rotated in the air supply and two bottles removed if required for testing after three periods: 3hrs ± 10mins; 8hrs ± 10mins; and 22hrs ± 10mins.

The bottles and screws shall be scraped to transfer the binder samples to the appropriate test equipment or, if required to be used later, placed on a silicone sheet, or in a penetration pot, and sealed and stored at between 0 ºC to 5 ºC.

'Aged Binder' is deemed to be the sample from the 8 hr period.

Inactive

The combined test may be run continuously without interruption from the beginning of the Rapid Recovery Test, except for change in temperature and changeover from nitrogen gas to air supply and any 'Recovered Binder' samples removed for testing.

For the continuous treatment of samples (combined test) there is no need for the microwave procedure to be used.

Binders for Manufacturing Asphalt or other Hot Mixed Materials
The initial conditioning test is to simulate the changes to the properties of the binder caused by the high temperatures during manufacture, transport and laying. The screws accelerate the process, and are necessary to maintain a homogeneous material especially when testing polymer modified binders, which tend to form a skin and separate into phases.

The standard 'short term ageing test' RTFOT shall be carried out in accordance with BS EN12607-1, at the same test temperature of 163 ºC but with the following exceptions: a test time of 45 mins ± 1 min; PTFE bottles with screws inserted shall replace the glass bottles; 19g ± 0.5 g of binder shall be weighed out into each preheated bottle; weighing of bottles to determine weight loss shall be carried out within 2 mins of removal from the carousel without the need to be placed in a desiccator; and bottles and screws shall be scraped to remove the 'short term aged binder'.

The RTFOT treated binder shall be tested for weight change by removing two of the bottles and weighing within 2 mins ± 1 min. If required for testing the 'short term aged binder' shall be removed by scraping and transferred to the appropriate test equipment or, if required to be used later, placed on a silicone sheet, or in a heated penetration pot (maximum 170 ºC), and sealed and stored at between 0 ºC to 5 ºC.

The remaining samples shall then be subjected to the Modified Aging RTFOT.

The temperature is reduced/set to (135 ºC ± 2 ºC) and the Modified Ageing RTFOT carried out:

The air supply shall be set at 4000 ± 200 ml/min.

Start the timer.

The samples shall be rotated in the air supply and two bottles removed if required for testing after three periods: 4 hrs ± 10 mins; 8 hrs ± 10 mins; and 22 hrs ± 10 mins.

Note: It has been found to be advantageous to place the bottles on their sides. This allows the binder to drain to one side of the bottle, which is more easily removed with the scraper.

The bottles and screws shall be scraped to transfer the binder to the appropriate test equipment or, if required to be used later, placed on a silicone sheet, or in a heated penetration pot (maximum 170 ºC), and sealed and stored at between 0 ºC to 5 ºC.

'Aged Binder' is deemed to be the sample from the 8 hr period.

The combined test may be run continuously without interruption from the beginning, except for the reduction in temperature after 45mins from 163 ºC to 135 ºC and at that time removal of bottles for test after RTFOT if required.

During transfer 'Aged' samples shall not be subjected to temperatures greater than ambient and the delay before testing shall not exceed 120 hours.

Re-heating for testing shall be in accordance with BS 2000-72 except that the 'Aged Binder' shall not be heated above 140 ºC unless absolutely necessary for the test. The thermal history of the sample shall be recorded.

924 High Friction Surfacing

1 High friction surfacing systems shall have current British Board of Agrément HAPAS Roads and Bridges Certificates.

2 A high friction surfacing system with a current British Board of Agrément HAPAS Roads and Bridges Certificate shall only be installed by a Contractor approved by the BBA and the Certificate Holder as an Approved Installer for that system.

3 The high friction surfacing system BBA/HAPAS Type Classification required for each location shall be as specified in Appendix 7/1.

Aggregate

4 Aggregate used in high friction surfacing systems shall have a minimum declared PSV category specified in Appendix 7/1 in accordance with BS EN 13043, clause 4.2.3. The resistance to abrasion of coarse aggregate shall have a maximum AAV specified in Appendix 7/1 in accordance with BS EN 13043, clause 4.2.4. The Contractor shall provide, before work commences, test certificates, issued by an appropriate organisation accredited in accordance with sub-Clauses 105.3 and 105.4 for those tests, not more than six months previously, showing conformity with the requirements.

Installation and Quality Control Procedures

5 The installation and quality control procedures shall be in accordance with the British Board of Agrément Roads and Bridges Certificate for each system and the current method statement agreed by the BBA. The results of all quality control checks carried out on site by the Contractor and quality assurance information compiled in accordance with the requirements of the Certificate, including results from BBA surveillance visits, shall be made available to the Overseeing Organisation on request.

System Coverage

6 For each location where high friction surfacing is applied, the total quantities of each system component used, the measured area of the surface treated and the calculated coverage rate in kg/m^2 shall be reported to the Overseeing Organisation within three days of completion at that location. For systems in which aggregate is broadcast over a film of binder applied to the surface, the calculated coverage rate shall be that of the binder film and shall not include the mass of the aggregate.

Guarantee

7 The Contractor shall guarantee the high friction surfacing materials and workmanship for a period of two years from the date of opening the surfacing to traffic. This guarantee shall exclude defects arising from damage caused by settlement, subsidence or failure of the carriageway on which the surfacing has been applied, but shall cover failure to meet the minimum requirements set out in Table 4 of the BBA/HAPAS 'Guidelines Document for the Assessment and Certification of High Friction Surfaces for Highways'.

925 Testing of Bituminous Mixtures

1 The sampling and testing of bituminous mixtures shall comply with BS EN 12697, except where otherwise specified in this Series.

2 If testing additional to that required by BS EN 13108–20, BS EN 13108–21, Sector 14 or the relevant SHW Clause this shall be specified in Appendix 7/1 or 1/5.

926 In Situ Recycling: The Repave Process

1 Where milling is required, it shall be carried out in accordance with Clause 706, and as described in Appendix 7/5.

Heating and Scarifying

2 Surfaces to be treated shall be heated by plant with heating surfaces insulated and fully enclosed. The heated-width of surfacing shall exceed the scarified width by at least 75 mm on each side, except against the edge of the carriageway or kerb face. When new surfacing material is spilt onto the road surface it shall be removed before the existing surface is heated and scarified. Areas of unscarified material shall not exceed 50 mm x 50 mm.

3 The depth of scarification shall be such that the bottom of the scarified layer is parallel to and below the finished road surface level by the thickness of surface course material specified in Appendix 7/5. A tolerance of ± 6 mm is permissible.

4 Where ironwork and other obstructions occur, these shall be suitably protected or removed and the void covered. Surface dressings and large areas of road markings shall be removed by milling, planing, scarifying or similar.

5 The heated surface shall be evenly scarified to comply with the requirements of sub-Clause 3 of this Clause. When ironwork is left in place or raised, the adjacent areas shall be scarified by other means, with the material either left in place or removed, prior to passage of the machine. If ironwork needs to be re-levelled, on completion of work, the new surface course material shall be used to make good the road surface for a maximum width of 200 mm around the ironwork.

6 During the reheating process the surface temperature of the road shall not exceed 200°C for more than 5 minutes.

New Surfacing

7 New surface course shall conform to Clause 910, 911, 942 or 943, as described in Appendix 7/5.

8 The new surfacing material shall be laid on, and compacted with the re-profiled surfacing, which shall be at a temperature within the range of 70°C to 150°C.

927 not used

928 Determination of the Complex Shear (Stiffness) Modulus (G*) and Phase Angle (δ) of Bituminous Binders using a Dynamic Shear Rheometer (DSR)

Scope

1 This Clause describes the test method for the determination of the Complex Shear (Stiffness) Modulus (G*) and Phase Angle (δ) of a bituminous binder over a range of temperatures and frequencies when tested in harmonic, sinusoidal oscillatory shear mode using a dynamic shear rheometer (DSR) with parallel plate test geometry and where both plates are controlled at the same temperature. Two methods are described. The first is the conventional equilibrated temperature method using frequency sweeps and is detailed in the Institute of Petroleum (IP) test method IP PM CM/02 and with the amendments stated in this Clause shall be used for Type Approval (type testing) purposes. The second is the temperature sweep method, where the temperature of the binder is raised at a known rate

and tested at a fixed frequency. The second test, which requires less time to perform, may be used for quality control purposes.

2 This Clause is applicable to unmodified and polymer modified binder as supplied, after the Rolling Thin Film Oven Test (RTFOT), after an Ageing Test or as recovered from a mixture. Bituminous binders containing fine mineral or organic matter or fibres may also be tested. For cutback bitumens, bituminous emulsions and polymer variants the binder shall be sampled from the delivery and a recovered binder prepared in accordance with Clause 923.

Definitions

3 For the purposes of this Clause the following definitions apply:

(i) Complex Shear Modulus (G*) (sometimes referred to as Complex Stiffness Modulus): ratio of peak stress to peak strain in harmonic, sinusoidal oscillation mode.
(ii) Phase Angle (δ): the phase difference between stress and strain in harmonic, sinusoidal oscillation mode.
(iii) Isotherm: an equation or curve on a graph representing the behaviour of the material at a constant temperature.
(iv) Linear region is defined as the range of strain over which the strain is directly proportional to the applied stress.
(v) High Equi-stiffness Temperature (T_{2kPa}): the temperature at which G* is equal to 2 kPa at 0.4 Hz determined from the plot of G* vs. temperature.
(vi) Low Equi-stiffness Temperature (T_{2MPa}): the temperature at which G* is equal to 2 MPa at 0.4 Hz determined from the plot of G* vs. temperature.
(vii) $G^*_{(pen)}$: the Complex Stiffness Modulus at 25°C and frequency 0.4 Hz.
(viii) $\delta_{(low)}$: the Phase Angle from the temperature equilibrated data at 5 °C and at a frequency of 0.4 Hz.
(ix) $\delta_{(high)}$: the Phase Angle from the temperature equilibrated data at 60 °C and at a frequency of 0.4 Hz.
(x) Black Diagram: a graph of the magnitude of G* against δ
(xi) Zero-Shear-Viscosity: the limiting value of viscosity of a visco-elastic liquid at a given temperature and a very low shear rate such that the material in deforming does not build up any structural changes and maintains equilibrium in the linear region.

Apparatus

4 The apparatus for the test is detailed in IP PM CM/02. The rheometer and the temperature control system shall be calibrated and traceable to national standards, where applicable, at intervals not exceeding 13 months.

Determination of Complex Shear (Stiffness), Modulus (G*) and Phase Angle (δ)

5 Determination of G* and δ for binders used to manufacture products at temperatures above 120 °C (for example asphalt) shall be as described in the IP method, except that the target strain shall be set within the range 0.005 and 0.02 and the sample preparation shall be Method A. For binders used at lower temperatures such as bituminous emulsions, or where volatile flux oil is present (for example cutback bitumen), the maximum 100 °C and preferably less than 85 °C. The IP Method shall be amended as follows:

Interim Advice

6 Method for Emulsions and Cutbacks:

(i) Sample preparation: Warm the recovered binder obtained using Clause 923 sufficiently to be able to remove small quantities from the bulk using a suitable spatula or other tool (A temperature around the softening point or the High Equi-stiffness Temperature (T_{2kPa}°C) is usually found to be suitable). The binder shall not be heated above 100 °C and not stored for longer than 1 hour at the target temperature. The binder shall be sealed with silicone release paper and/or metal foil to minimise ageing and loss of volatiles.

(ii) Sample loading: Weigh a pre-calculated amount of binder, to suit the geometry, directly onto one of the rheometer plates or onto a silicone-based material for subsequent transfer to one of the plates. The time for transfer shall be recorded.

(iii) Sample gapping: The plates shall be at the same temperature prior to setting the gap. The required gap shall be set immediately and no trimming is required.

(iv) Allow the sample and both plates to equilibrate at a temperature above the softening point or T_{2kPa}°C for at least 15 minutes prior to commencement of the test.

(v) If the recovered binder is heavily modified such that the elastic properties prevent normal loading of the sample then a higher temperature shall be selected as near to 100 °C as possible and this shall be reported in the test report.

Data Acceptability Criteria

7 The acceptability criteria detailed in the IP Method shall be used for different test geometries or for at least two samples.

8 If the acceptability criteria are not met for two samples then a third verification test shall be carried out, the shortened procedure may be used (25°C and frequency sweep) for the second and subsequent samples. If the acceptability criteria are met for the first and third tests, the results of the first test shall be accepted. If the acceptability criteria are met for the second and third tests, discard the results for the first test and continue testing the third sample by the full procedure used for the first sample, these results are verified by the second test. If none of the three tests are within the acceptability criteria then the mean of the results obtained in two full tests shall be reported with a note that the acceptability criteria could not be met.

Temperature Sweep Test Procedure for Quality Control

9 After equilibration of the sample above the softening point or the High Equi-stiffness Temperature (T_{2kPa}°C) for at least 15 minutes a temperature sweep shall be carried out from the lowest test temperature to at least 60°C or T_{2kPa}°C whichever is the higher. The test frequency shall be 0.4 Hz (± 0.04 Hz). G* and Phase Angle (δ) shall be measured at temperature intervals not greater than 5.5°C. The rate of temperature increase shall be 2.5 °C per minute or a lesser-fixed rate, which shall be stated with tolerances (not greater than ± 0.5 °C).

10 The plot of G* and Phase Angle (δ) against temperature may be used to compare a sample with a type test for the product by the equilibrated temperature method. If the value for G* is within ± 30% and Phase Angle (δ) within ± 10 degrees at 25 °C then the data is deemed to be valid for comparison. If not, then a second sample shall be tested, if the values for G* are within ± 30% and Phase Angle (δ) are within ± 10 degrees for 90% of the results for the first test the data is deemed to be valid and different to the type test. If the supplier has reasoned that higher tolerances are necessary for the particular product at Type Approval (type testing) stage these shall be used instead for comparison. The supplier may also state the sample preparation technique to be used for this comparison.

11 Alternatively the equilibrated temperature data from frequency sweeps (the IP method) may be used, although the number of equilibrated temperature tests at 0.4 Hz will need to be increased (5 °C intervals).

12 If required the temperature sweep shall be carried out with a reducing temperature from 80 °C to the lowest test temperature in addition to the normal test, this shall be noted in the test report.

Expression of Results

13 A table of results, based on the individual test results, shall be produced which shall include the following information at each temperature:

(i) Test temperature ºC
(ii) Test frequency Hz
(iii) Strain%
(iv) Phase Angle (δ) Degrees
(v) Complex Stiffness Modulus (G*) Pascals.

14 A graph of G* against temperature shall be produced, in decades from 101 to 108 Pa as a curve at 0.4 Hz ± 0.04 Hz with a linear temperature x-axis of -10 °C to 90 °C.

15 A graph of Phase Angle (δ) against temperature shall be produced from 20 to 90 degrees ascending with a linear temperature x-axis of -10 °C to 90 °C at a frequency of 0.4 Hz ± 0.04 Hz.

16 A graph of G* against Phase Angle (δ) (Black Diagram) shall be produced in decades from 101 to 108 Pa with a linear x-axis of 90 to 20 degrees descending.

17 Plots of isotherms for G* against frequency tested at each test temperature shall be produced in decades from 101 to 108 Pa with an x-axis in decades of frequency from 10-2 Hz to 101 Hz.

18 Plots of isotherms for Phase Angle (δ) against frequency tested at each test temperature shall be produced from 20 to 90 degrees with an x-axis in decades of frequency from 10-2 Hz to 101 Hz.

19 The x-axes of the graphs shall have dimensions of at least 200 mm and the y-axes at least 150 mm.

20 The following test values shall be reported:

(i) T_{2kPa}: the High Equi-stiffness temperature.
(ii) T_{2Mpa}: the Low Equi-stiffness temperature.
(iii) $G^*_{(5°C)}$: the value of G* at the equilibrated temperature of 5°C and 0.4 Hz.
(iv) $G^*_{(pen)}$: the value of G* at the equilibrated temperature of 25°C and 0.4 Hz.
(v) $G^*_{(60°C)}$: the value of G* at the equilibrated temperature of 60°C and 0.4 Hz.
(vi) $\delta_{(low)}$: the value of δ at low temperature 5°C and loading time of 0.4 Hz.
(vii) $\delta_{(high)}$: the value of δ at high temperature 60°C and loading time of 0.4 Hz.
(viii) Zero-Shear-Viscosity at 45°C (ZSV_{45}) and 60°C (ZSV_{60}) calculated from the procedure outlined in a paper by Baumgaertel, M. and Winter, H.H., "Determination of discrete relaxation and retardation time spectra from dynamic mechanical data", Rheol Acta 28:511-519 (1989) or equivalent method with procedure outlined.

The complex stiffness modulus (G*) shall be reported to three significant figures, phase angle to the nearest 0.1 of a degree and temperature to 0.1 °C.

Test Report

21 The test report shall contain at least the following information:

(i) A reference to this test procedure.
(ii) Place of test.
(iii) The rheometer type, model and test geometries (plates and gaps) used.
(iv) The compliance limitations of the machine/geometry (including whether software corrections have been applied in terms of the maximum sample stiffness at which the result reported will be in error by less than 10%). The limitations shall be reported for each plate geometry used to obtain the results reported.
(v) The type and identification of the product tested.
(vi) Sample thermal history: how, when and where the sample was taken; the size of the sample and whether it was sub-divided; the period it was stored and the conditions of storage; and whether it was treated by RTFOT and/or Ageing Test or was a recovered binder from emulsion or cutback in accordance with Clause 923, or recovered from an asphalt, with the recovery test method detailed.
(vii) Strain conditions of the test at 25°C and 0.4 Hz and at the extremes of the temperature and frequency ranges used to provide data.
(viii) Sample loading method, temperature and time for transfer.
(ix) Frequency sweep direction for the IP method.
(x) Temperature sweep direction for the method if used and target rate of change with tolerances.
(xi) The results of the test as set out under this Clause.
(xii) Whether the Data Acceptability Criteria in this Clause were met.
(xiii) Any deviation, by agreement, or otherwise, from the procedure specified.
(xiv) Date of test.
(xv) Name of the person responsible for the test.

22 The test report and graphs, uniquely identified shall be provided to the Overseeing Organisation with the Contractor's Proposal.

23 A copy of the data in digital format suitable for graphical production shall be provided to the Overseeing Organisation.

929 Dense Base and Binder Course Asphalt Concrete (Design Mixtures)

1 Designed dense base and binder course asphalt concrete (formerly macadams), including HDM and HMB, shall be asphalt concrete conforming to BS EN13108-1, the detailed requirements of BSI PD 6691 Annex B for the selected mixture, and requirements specified in Appendix 7/1. The mixture designation shall be one of the following:

(i) AC 32 HDM base 40/60 des
(ii) AC 32 dense base 40/60 des
(iii) AC 32 HMB base 30/45 des
(iv) AC 20 HDM bin 40/60 des
(v) AC 32 HDM bin 40/60 des
(vi) AC 20 dense bin 40/60 des
(vii) AC 32 dense bin 40/60 des
(viii) AC 20 HMB bin 30/45 des
(ix) AC 32 HMB bin 30/45 des

2 The volumetric properties of mixtures shall be as specified in PD 6691, clause B.3.2 for designed base mixtures and PD 6691, clause B.3.3 for designed binder course mixtures.

3 When specified in Appendix 7/1, the volumetric properties of the mixture shall be monitored by determining the void content of cores compacted to refusal. Core pairs and samples of loose mix shall be taken every 500 lane metres and tested in accordance with BS 594987, clauses C.2.1, C.2.2, C.3, C.4.1 and C.4.2. If the mean air void content at refusal of any three consecutive pairs of cores falls below 0.5%, the mixture target composition shall be reviewed and the type test revalidated in accordance with BS 594987, Annex C.

Deformation Resistance

4 The resistance to permanent deformation of the mixture shall be in accordance with the appropriate class selected from Table D.2 of PD 6691, as specified in Appendix 7/1.

5 When specified in Appendix 7/1, the resistance to permanent deformation of material laid in the permanent works shall be monitored by testing in accordance with clauses D 3.1, 3.2 and 3.3 of BS 594987 Annex D. Six cores shall be taken from the first kilometre length of material from each mixing plant and thereafter one further core from each subsequent lane kilometre. Results shall be assessed on successive rolling means of sets of six consecutive results and shall be deemed to conform if the mean is no greater than the specified value and individual values not more than 50% greater than the specified value.

Stiffness

6 Stiffness of the mixture shall be assessed in accordance with BS 594987, Annex E.

Mixtures with 40/60 grade binder shall conform to category $S_{min\ 1800}$ as defined in BS EN 13108, clause 5.4.2.

Mixtures with 30/45 grade binder shall conform to category $S_{min\ 2800}$ as defined in BS EN 13108, clause 5.4.2.

Compaction Control for the Permanent Works

7 Compaction shall be controlled and monitored in accordance with the general requirements of BS 594987 9.5.1 and the specific requirements of this Clause.

8 Compaction shall be continuously assessed using an indirect density gauge in accordance with BS 594987 9.4.2 with readings taken at 20 m intervals in alternate wheel-tracks. Gauge readings shall also be taken at each core location specified in sub clauses 12 and 14. Each gauge shall be individually calibrated on each mixture from each mixing plant and the calibrations shall be continually checked and updated based on correlations between gauge readings and core densities at the same locations.

9 For each location, the in situ void content shall be determined in accordance with BS EN 12697-8 using the bulk density from the gauge reading and a maximum density taken from the mixture type testing data and updated with values from testing in accordance with sub-Clause 12.

10 The average in situ void content calculated from any six consecutive indirect gauge readings shall not exceed 7%.

11 In the event of a failure to meet the requirements in sub-Clause 10, cores shall be taken at each location and void contents determined as described in sub-Clause 12 and the evaluation of the extent of any non conformity shall be based on these. If it is necessary to remove and replace any material to restore conformity this shall be in lengths not less than 15m unless otherwise agreed by the Overseeing Organisation.

12 For the material from each mixing plant, a pair of cores shall be taken from the wheel-tracks every 1000 metres laid and the void content shall be determined in accordance with BS 594987, clause 9.5.1.3.

13 The average in situ air voids for each core pair shall not exceed 7%.

14 For the material from each mixing plant a pair of cores shall be taken every 250 metres laid, centred 100mm from the final joint position at any unsupported edge and the air void shall be determined in accordance with BS 594987, clause 9.5.1.3.

15 The average in situ void content for each of these pairs shall not exceed 9%.

16 In the event of non conformity with sub-Clauses 13 or 15 then density readings with indirect gauges and, if necessary, further cores shall be taken to establish the extent. If it is necessary to remove and replace any material to restore conformity, this shall be in lengths not less than 15m unless otherwise agreed by the Overseeing Organisation.

17 Each core extracted shall be examined for evidence of excessive voids below the depth to which the indirect density gauge penetrates. If excessive voids are observed, further cores shall be taken to determine its extent.

18 Two copies of the final indirect density test results obtained and their correlation with in situ air void contents shall be passed to the Overseeing Organisation within 72 hours.

930 EME2 Base and Binder Course Asphalt Concrete

1 EME2 base and binder course asphalt concrete shall conform to BS EN13108-1, the detailed requirements of BSI PD 6691 Annex B for the selected mixture, the requirements of this Clause and those specified in Appendix 7/1. The mixture designation shall be one of the following:

(i) AC 10 EME2 bin/base 10/20 des
(ii) AC 10 EME2 bin/base 15/25 des
(iii) AC 14 EME2 bin/base 10/20 des
(iv) AC 14 EME2 bin/base 15/25 des
(v) AC 20 EME2 bin/base 10/20 des
(vi) AC 20 EME2 bin/base 15/25 des

2 The binder shall be Hard Paving Grade Bitumen in accordance with BS EN 13924 and the requirements specified in Tables 9/4, 9/5 and 9/6.

3 EME2 mixtures, otherwise conforming to BS EN 13108-1 and the detailed requirements of BSI PD 6691 Annex B, but using alternative paving grade bitumens or polymer modified paving grade bitumens, shall not be used without prior approval by the Overseeing Organisation.

Withdrawn

Table 9/4: Initial Binder Characteristics, as supplied

Characteristic	Test Method	Unit	Hard Grade Binders for EME2		FPC
			10/20 pen	15/25 pen	Test frequency
Penetration at 25°C	EN 1426	0.1mm	10 – 20	15 - 25	D
Softening Point	EN 1427	°C	63 – 73 Target value 71 max (1)	60 – 70 Target value 68 max (1)	W
Penetration Index, max	EN 13924 Annex A	-	+0.7 Target value +0.5 max (1)	+0.7 Target value +0.5 max (1)	W
Fraass breaking point, max	EN 12593	°C	Target mean(2) 0 max Range –10 to +5	Target mean(2) 0 max Range –10 to +5	Q
Viscosity at 135°C, min	EN 12595	$mm^{2/s}$	1100	900	Q
Flash point, minimum	EN 2592	°C	245	245	A
Solubility, minimum	EN12592	%(m/m)	99.0	99.0	A

Notes:

(1) Target max value based on a rolling mean of the last 6 consecutive results in compliance testing or FPC as appropriate.

(2) Target max value based on a rolling mean of the last 3 consecutive results in compliance testing or FPC as appropriate.

All tests to be carried out on sub-samples of a single bulk sample of binder.

Minimum test frequency: D = Daily, W = Weekly, Q = Quarterly, A = Annually.

(Indicated frequencies apply only if product is in regular supplied.)

Table 9/5: Binder Characteristics, after short-term ageing to EN 12607-1 (RTFOT)

Characteristic	Test Method	Unit	Hard Grade Binders for EME2		FPC
			10/20 pen	15/25 pen	Test frequency
Change of mass, max		%	0.5	0.5	A
Retained Pen 25°C, min	EN 1426	%	65	65	Q
Increase in Softening Point, maximum	EN 1427	°C	8	8	Q
Fraass breaking point, min	EN 12593	°C	Target mean(1) +2 max Range –8 to +7	Target mean(1) +2 max Range –8 to +7	Q

Notes:

(1) Target max value based on a rolling mean of the last 3 consecutive results in compliance testing or FPC as appropriate.

All tests to be carried out on sub-samples of a single bulk sample of binder.

Minimum test frequency: Q = Quarterly, A = Annually.

(Indicated frequencies apply only if product is in regular supply.)

Interim Advice Note

Table 9/6: Binder Characteristics To Be Reported

Characteristic	Test Method	Unit	Binder for EME2	FPC frequency		
				AS	STA	LTA
Brookfield Viscosity T 200cP	EN 13302	°C	TBR	A		
T 2000cP		°C	TBR		A	
T 5000cP		°C	TBR		A	
G* and Phase Angle	prEN 14770	Pa, degrees	TBR	A	A	A
VET temperature, G'= G", at 0.4 Hz	Clause 928	°C	TBR	A	A	A
G* at the VET temperature		Pa	TBR	A	A	A
G' and G" Mastercurves 80°C to 0°C	Graphical Output	Graphical output	TBR	A	A	A
G" & Phase angle at 15°C, 10Hz and 20°C, 1Hz		Pa, degrees	TBR	A	A	A
$T_{S=300\ MPa}$, by BBR	prEN 14771	°C	TBR	Q	Q	Q
$T_{m\ =\ 0,3}$, by BBR		°C	TBR	Q	Q	Q
Pendulum Cohesion, min	SHW Cl 939 (Reported graphically)	J/cm²	TBR	Q	Q	Q

Notes:
AS = As Supplied; STA = After EN12607-1 (RTFOT) * LTA = After PAV85 *
*An ageing profile determined in accordance with SHW Cl 923 is an acceptable alternative to STA and PAV85.
All tests to be carried out on sub-samples of a single bulk sample of binder. Minimum test frequency: Q = Quarterly, A = Annually. (Indicated frequencies apply only if product is in regular supply.)

4 The properties of mixtures shall be as required in PD 6691 Annex B, clause 3.4.1 to clause 3.4.7 inclusive.

5 A separate assessment shall be made of the conformity of soluble binder content analysis results of EME2 mixtures using the principles of the 'mean of four results' approach used in BS EN 13108-21. Binder content shall be assessed on a continuous basis by taking the mean value of the previous four analysis results. This will give a 'rolling mean binder content'. In addition to the analysis results meeting all of the standard conformity requirements of EN 13108-21, this rolling mean binder content shall comply with the target composition + 0.3%.

Compaction

6 EME2 shall be delivered to site at a temperature which enables laying with a minimum paver-out temperature of 140 ^{o}C.

Incorporated

7 EME2 mixtures shall be compacted with either:

(i) steel rollers exceeding 8 tonnes, provided compaction is speedily undertaken. Any vibration shall be switched off when traversing compacted material to avoid micro-cracking the cooling surface;
(ii) pneumatic tyred rollers (PTR's) weighted at a minimum of 1.0 tonne per wheel, finishing with wide steel non-vibrating rollers and 3- point rollers.

8 Compaction shall substantially completed before the temperature falls below 120°C. Limited rolling without vibration may be carried out below this temperature to improve the finish.

Compaction Control for the Permanent Works

9 Compaction shall be controlled and monitored in accordance with the general requirements of BS 594987 9.5.1 and the specific requirements of this Clause.

10 Compaction shall be continuously assessed using an indirect density gauge in accordance with BS 594987 9.4.2 with readings taken at 20 m intervals in alternate wheel-tracks. Gauge readings shall also be taken at each core location specified in sub-Clauses 13 and 14. Each gauge shall be individually calibrated on each mixture from each mixing plant and the calibrations shall be continually checked and updated based on correlations between gauge readings and core densities at the same locations.

11 For each location, determine the in situ void content in accordance with BS EN 12697-8 using the bulk density from the gauge reading and a maximum density taken from the mixture type testing data and updated with values from testing in accordance with sub-Clauses 13 and 14.

12 The average in situ void content calculated from any six consecutive indirect gauge readings shall not exceed 6%.

13 In the event of a failure to meet the requirements in sub-Clause 12, cores shall be taken and void contents determined in accordance with BS 594987, clause 9.5.1.3 and the evaluation of the extent of any non conformity shall be based on these. If it is necessary to remove and replace any material to restore conformity this shall be in lengths not less than 15 m unless otherwise agreed by the Overseeing Organisation.

14 For the material from each mixing plant a pair of cores shall be taken from the wheel-tracks every 1000 metres laid and the void content shall be determined in accordance with BS 594987, clause 9.5.1.3.

15 The average in situ air voids for each core pair shall not exceed 6%.

16 For the material from each mixing plant a pair of cores shall be taken every 250 metres laid, centred 100mm from the final joint position at any unsupported edge and the air void shall be determined in accordance with BS 594987, clause 9.5.1.3.

17 The average in situ void content for each of these pairs shall not exceed 8%

18 In the event of non conformity with sub-Clauses 15 or 17 then density readings with indirect gauges and, if necessary, further cores shall be taken to establish the extent. If it is necessary to remove and replace any material to restore conformity this shall be in lengths not less than 15 m unless otherwise agreed by the Overseeing Organisation.

19 Each core extracted shall be examined for evidence of excessive voids below the depth to which the indirect density gauge penetrates. If excessive voids are observed, further cores shall be taken to determine its extent.

20 Two copies of the final indirect density test results obtained and their correlation with in situ air void contents shall be passed to the Overseeing Organisation within 72 hours of the material being laid.

931 not used

932 not used

933 not used

934 not used

935 not used

936 not used

937 Stone Mastic Asphalt (SMA) Binder Course and Regulating Course

General

1 Stone Mastic Asphalt binder course and regulating course shall conform to BS EN13108-5, the detailed requirements from BSI PD 6691 Annex D for the selected mixture, the requirements of this Clause and those specified in Appendix 7/1. The mixture designation shall be one of the following:

(i) SMA 6 bin 40/60
(ii) SMA 6 bin 70/100
(iii) SMA 6 bin 100/150
(iv) SMA 6 bin PMB
(v) SMA 10 bin 40/60
(vi) SMA 10 bin 70/100
(vii) SMA 10 bin 100/150
(viii) SMA 10 bin PMB
(ix) SMA 14 bin 40/60
(x) SMA 14 bin 70/100
(xi) SMA 14 bin 100/150
(xii) SMA 14 bin PMB
(xiii) SMA 20 bin 40/60
(xiv) SMA 20 bin 70/100
(xv) SMA 20 bin 100/150
(xvi) SMA 20 bin PMB

Binder Modification

2 Polymer modified bitumens shall comply with BS EN 14023 and shall have British Board of Agrément HAPAS Roads and Bridges Certification.

3 Binder modifiers, including natural or man-made fibres which are added or blended with base bitumen complying with BS EN 12591 of the stated penetration range at the mixing plant, shall have British Board of Agrément HAPAS Roads and Bridges Certification.

4 Without BBA HAPAS certification, the Contractor shall provide data sheets giving details of the properties of the modified binders or additives proposed, including those specified in Appendix 7/1. These shall include rheological data for pre-blended polymer

Interim Advice

modified binders in accordance with Clause 928 and cohesion in accordance with Clause 939. Without BBA HAPAS certification, polymer modified binders, binder modifiers or additives shall not be used without the approval of the Overseeing Organisation.

Deformation Resistance

5 The resistance to permanent deformation of the mixture shall be in accordance with the appropriate class selected from Table D.7 of PD 6691 as specified in Appendix 7/1.

6 When specified in Appendix 7/1 the resistance to permanent deformation of material laid in the permanent works shall be monitored by testing in accordance with BS 594987, clause G 3.1, 3.2 and 3.3. Six cores shall be taken from the first kilometre length of material from each mixing plant and thereafter one further core from each subsequent lane kilometre. Results shall be assessed on successive rolling means of sets of six consecutive results and shall be deemed to conform if the mean is no greater than the specified value and individual values not more than 50% greater than the specified value.

Compaction control for Permanent Works

7 Compaction shall be controlled by monitoring density and air void content in accordance with BS 594987, clause 9.5.3 and the requirements of this Clause.

8 Density shall be continuously assessed using an indirect density gauge in accordance with BS 594987, clause 9.4.2, with readings taken at 50 m intervals in the centre of the mat. Gauge readings shall also be taken at each core location specified in BS 594987, clause 9.5.3.2.1 and at the location of cores required by sub-Clause 11. Each gauge shall be individually calibrated on each mixture from each mixing plant and the calibrations shall be continually checked and updated based on correlations between gauge readings and core densities at the same locations.

9 For each location, the in situ void content shall be determined in accordance with EN 12697-8 using the bulk density from the indirect gauge reading and a maximum density taken from the mixture type testing data and updated with values from testing in accordance with sub-Clause 8.

10 The average in situ void content calculated from any six consecutive indirect gauge readings shall not exceed 5%, or for regulating course less than 30mm in thickness, shall not exceed 7%.

11 In the event of a failure to meet the requirements in sub-Clause 10, cores shall be taken at each location and void contents determined. Testing of cores shall be carried out in accordance with BS 594987 section 9.5.3 and assessment of conformity shall be in accordance with BS 594987, clause 9.5.3.6.1

12 In the event of non conformity with the requirements of sub-Clause 11 then density readings with indirect gauges and if necessary, further cores shall be taken to establish the extent of the non conformity. If it is necessary to remove and replace any material to restore conformity this shall be in lengths not less than 15m unless otherwise agreed by the Overseeing Organisation.

13 If the density readings taken with the indirect density gauge indicate that the air voids content may be less than 2%, one 200 mm diameter core shall be cut at that chainage and the resistance to permanent deformation checked in accordance with sub-Clause 6.

Bond Coat

14 Where the thickness of the stone mastic asphalt is less than 20 mm, polymer modified bond coats shall be used.

938 Porous asphalt

1 Porous asphalt shall conform to BS EN 13108-7, as specified in Appendix 7/1.

939 Determination of Cohesion of Bitumen and Bituminous Binders

Scope

1 This Clause specifies the Vialit Pendulum Test method for the measurement of the cohesion of bitumen and bituminous binders at temperatures in the range -10 °C to + 80 °C, and determines the relationship between cohesion and temperature.

Definition

2 For the purposes of this Clause the following definition shall apply:

Cohesion: "the energy per unit area which is needed to break a film of bituminous binder under specified conditions of impact".

Principle of the Test

3 A steel cube of sides 10 mm shall be fixed to a steel support by a film of binder 1 mm thick. The assembly shall be brought to the test temperature, then the cube is dislodged by the impact of a swinging pendulum. For the operating principle of the pendulum, see Figure 9/3. The energy absorbed by rupture of the binder film is calculated from the swept angle after impact of the pendulum. The determination shall be performed at not less than six different temperatures covering the range over which the binder has a cohesion greater than a specified minimum; at each such temperature the test is performed in triplicate.

Test Apparatus

4 The test apparatus shown in Figures 9/4 to 9/7 comprises:

(a) The Cohesion Tester

The cohesion tester comprises:

(i) A heavy rigid metal base provided with a bubble type level gauge and set in a horizontal position by means of height adjustment screws.

(ii) Two rigid vertical supports for the pendulum, attached to the base.

(iii) An adjustable quick-release clamping device to hold a test assembly firmly to the base. Positioning requirements for the test assembly are given in sub-Clause 6(a) of this Clause.

(iv) A pendulum, having the form and dimensions specified in Figure 9/5, capable of rotating freely on a horizontal shaft held in ball bearings in the supports in item (a)(ii) above. The longitudinal axis of the cube support holder shall be at right angles to the axis of the pendulum fulcrum. The mountings for the bearings and the fixings for the cube support holder shall be adjustable. This is so that the impact edge of the pendulum can be closely adjusted for freedom of swing and height with respect to the test specimen.

(v) A pointer on the pendulum support shaft which is driven forward by the pendulum but is held by friction at the point of maximum swing until manually reset. The friction device shall be adjustable.

(vi) A circular scale for the pointer, graduated 0 to 360 degrees to the circle in 0.5 degree intervals, with zero at the lower balance position of the pendulum and 180 degrees at the upper balance position. Alternatively, the graduations may be in grads (or gon), graduated 0 to 400 grads to the circle in 0.5 grad intervals.

(vii) A removable protective cage, fitting to the base of item (a)(i) above, constructed to allow the pendulum to swing without impediment but to catch dislodged cubes. Suitable access (e.g. a hinged door) shall be provided to allow a test assembly to be positioned rapidly in the clamping device of item (a)(iii) above.

Interim Advice

(b) Cubes and Cube Supports
Cubes and cube supports shall be made of steel to the forms and dimensions given in Figures 9/6 and 9/7. Three test assemblies (cube attached by film of binder to cube support) are needed for each test, and typically eight tests are needed to show the relation between cohesion and temperature. It is therefore useful to have at least 24 cubes and cube supports. The mass of any cube shall be as specified in Figure 9/6. The masses of the individual cubes in a set used for testing any one sample shall not differ from the mean by more than 0.25 g. It is important to ensure good adhesion between binder and cube/cube support, and to facilitate this serrations are necessary on the test faces of the cube and cube support. A form of test assembly that has been found successful is shown in Figures 9/6 and 9/7. The precise details are not mandatory and alternative configurations may be used provided they do not result in adhesion failure between binder and cube or cube support during testing. Guidance on examination for adhesion failure is given in sub-Clause 8(v) below.

(c) Oven
An oven to pre-heat the cubes and supports before application of binder. The temperature shall be set at 55 °C ± 5 °C.

(d) Water Bath or Conditioning Oven
A water bath capable of maintaining the set temperature within the range 0 °C to + 80 °C within a tolerance of ± 0.2 °C, and large enough to allow at least twelve test assemblies to be positioned horizontally in the temperature-controlled area. For temperatures below 5 °C, ethylene glycol shall be added to water baths to prevent freezing. It is helpful, but not essential, to have several such pieces of equipment set at different temperatures, in which case it is not necessary for any single piece of equipment to be able to cover the entire temperature range, provided any temperature in the specified range can be achieved by at least one piece of equipment. It is not necessary for the several pieces of equipment to be of the same type.

(e) Thermometer
The thermometer shall be capable of measuring the temperature of the temperature conditioning equipment, readable and calibrated to 0.2 °C or less. It will be helpful but not essential to have one such thermometer for each piece of temperature conditioning equipment.

Preparation of Apparatus
5 The procedure described in this sub-Clause shall be followed at the commencement of each day's testing. Ambient temperature shall be in the range 15 °C to 35 °C during preparation of the apparatus and during subsequent testing. The following procedure shall be used:

(i) Place the tester on a rigid, stable support and ensure that it is level.
(ii) Check that the impact edge of the pendulum is undamaged and straight; if necessary trim with a file.
(iii) First ensure the test apparatus is compliant with sub-Clause 4(a) of this Clause. Set the pendulum hanging freely in the "down" position and ensure that the scale reading is 0 ± 0.25 degrees by adjustment of the scale if necessary. Adjust the position of the clamping device so that a test assembly is held in a position such that the impact edge of the pendulum is parallel to the bottom of the cube and just in contact with the cube over its full length at a height of 0.0 to 1.0 mm above the bottom edge of the cube.
(iv) Set the pendulum in the "up" position. Check that the scale reading is 182 ± 2 degrees, and the release mechanism functions smoothly; if any adjustment is required repeat the above procedure.

(v) Perform tests with no test assembly in position until the swept angle from scale zero of the pendulum is constant to ± 0.5 degrees and a minimum of 160 degrees for six successive swings. If necessary, adjust the friction device of the pointer to achieve this.

(vi) Perform a series of tests using a cube and cube support with no binder until six results are obtained for which the swept angle after impact differs from the mean by no more than 1 degree, and record this mean value.

Preparation of Test Equipment and Binder Samples

6 Preparation of test equipment and binder samples shall include preparation of cubes and cube supports, preparation of the binder, and preparation of test assemblies, all as specified below.

Preparation of Cubes and Cube Supports

At the commencement of a series of tests on a single binder, ensure that the cubes and cube supports are clean by washing in a suitable solvent, using a small brush to remove contamination from the serrated face. Dry the cubes and supports in an oven, and reject any which are visibly damaged. Pre-heat them in an oven for at least thirty minutes to a temperature of 55 °C ± 5 °C before applying the binder to be tested.

Preparation of the Binder

Ensure that the laboratory sample is homogeneous and the test sample is representative of the laboratory sample from which it is taken in accordance with BS EN 58. Bring the binder to a temperature at which it can be spread on the serrated faces of the pre-heated cube and support; in the case of cut back bitumens this can usually be done without heating the binder, whereas heavily modified bitumens require heating to a temperature at which their flow behaviour becomes predominantly viscous. Any limitations set by the binder supplier on heating times and temperatures shall be observed; if none are available the binder shall not be heated to a temperature greater than 50 °C above its ring and ball softening point.

Preparation of Test Assemblies

At least three test assemblies shall be prepared for each test temperature, and the following procedures shall be followed:

(i) Take one pre-heated cube and one preheated cube support. Apply pre-heated binder to both serrated faces, and spread it over the whole area. The total amount of binder applied shall be in excess of that needed for the test film (0.2 ml). Immediately place the cube on the support with the serrations facing each other and the locating flanges of the cube parallel to the edge of the support which will be parallel to the plane of movement of the pendulum when the assembly is inserted in the clamping device of the tester. Apply pressure to the cube and to the support so that the excess of binder is squeezed out and the locating flanges of the cube are in contact with the support. The time taken to perform the procedures in this sub-Clause shall not be greater than 2 minutes.

(ii) Repeat as in sub-Clause 6(i) above for each test assembly.

(iii) Remove the excess of binder from the cube faces of the test assemblies by scraping with a knife blade (which may be heated). The cube face which will be struck by the pendulum shall be cleaned if necessary using absorbent paper with a little solvent, taking care not to allow solvent to contaminate the exposed edge of the film of binder.

(iv) Place a set of three test assemblies in a water bath as specified in sub-Clause 4(d) of this Clause at the required test temperature for a duration of 30 to 120 minutes.

Selection of Test Temperatures

7 At high temperatures the binder behaves in a viscous manner; cohesion is low, falling asymptotically to zero as the temperature increases. At low temperatures the binder undergoes brittle failure on impact of the pendulum; cohesion is low, falling asymptotically to a low value as the temperature falls. At intermediate temperatures cohesion reaches a maximum value. Test temperatures shall be selected so that there is compliance with all the following five conditions:

(i) Not less than one result is between 0.2 and 0.4 J/cm^2 at the low temperature end of the curve.
(ii) Not less than one result is between 0.2 and 0.4 J/cm^2 at the high temperature end of the curve.
(iii) Not less than three results are within 3 °C of the temperature of maximum cohesion, with at least one result on each side of the maximum.
(iv) Not less than two results are on the low temperature side of the peak, between 0.4 J/cm^2 and the peak value; and at least two results are on the high temperature side of the peak, between 0.4 J/cm^2 and the peak value.
(v) The difference between any two adjacent results shall be not more than 1.0 J/cm^2 and not more 15 °C.

Measurements at different temperatures may be made in any order. If the cohesion properties of the sample are unknown, it is suggested that the first measurement be at approximately 35 °C, followed by tests at approximately 10 °C intervals both above and below this value until results below 0.4 J/cm^2 are obtained. If 0.4 J/cm^2 is not reached at temperatures 40 °C on either side of the peak temperature then the test shall be limited to that range and fact reported. Finally, measurements shall be made at intermediate temperatures to conform with the requirements above and to define the peak more accurately.

Procedure

8 The following shall be the test procedure:

(i) Set the pendulum in the “up” position; reset the dial pointer.
(ii) Open the door of the protective cage.
(iii) Transfer a test assembly from the temperature-controlled environment to the clamping device of the tester. Care shall be taken to ensure that the test assembly is moved without disturbance of the cube relative to the support. Close the door of the protective cage and release the pendulum. The time taken to perform the procedures in this sub-Clause 8(iii) shall not be greater than 20 seconds.
(iv) Record the swept angle of the pendulum after impact (α) to the nearest half degree - see Figure 9/3.
(v) Remove the detached cube and cube support from the protective cage. Examine the faces in contact with binder for evidence of adhesion failure. If an area of bare metal greater than 5 mm^2 is visible, record the fact. If necessary to achieve adequate adhesion the test may be repeated using higher temperatures than specified in sub-Clauses 6(a) and 6(b) of this Clause for the combined binder, cube and cube support.
(vi) Examine the impact edge of the pendulum. If any binder is adhering to the edge, remove it using absorbent paper and a little solvent.
(vii) Repeat twice steps (i) to (vi) above. All three tests at one temperature shall be performed within a five minute period.
(viii) Perform the zeroing tests required under sub-Clause 5(vi) of this Clause at a frequency of not less than twice per day.

When testing to resolve any dispute as to the cohesion of the bitumen or bituminous binder, six tests shall be performed at each temperature.

Calculation

9 The following symbols are used in this Clause:

E_B is the energy absorbed in breaking the binder (Joules)
E_K is the energy absorbed in imparting kinetic energy to the detached cube (Joules)
E_T is the total energy absorbed in breaking the binder and in imparting kinetic energy to the detached cube (Joules)
α is the swept angle after impact of the pendulum in degrees, or grads (or gons), as indicated by the pointer (0 degrees corresponds to the lowest position)
C is the cohesion* at the required test temperature (J/cm^2)
C_M is the maximum cohesion* value obtained (J/cm^2)
T_M is the temperature (°C) at which maximum cohesion occurs
M is the mass of the pendulum (gm)
R is the radius of the centre of gravity of the pendulum (cm)
A is the area of the binder on the sample (cm^2)
g is the acceleration due to gravity (cm/sec/sec)

Note: * See definition of cohesion in sub-Clause 2 of this Clause

10 Calculate the mean value of the swept angle after impact (α) from the three determinations at one temperature. This becomes the test result at that temperature. If one of the three determinations gives a value for α differing from the mean value by more than 3 degrees it shall be rejected, and the mean then calculated from the remaining two determinations. If these two determinations differ by more than 3 degrees all determinations shall be rejected and the test shall be repeated at that temperature in its entirety.

11 The total energy (ET) is given by the following equation:

$$E_T = MgR(1 + \cos \alpha) = E_B + E_K$$

As M, g and R are all constant for a given instrument, rather than perform the above calculation for each test it is convenient to first construct a table giving values of E_T for a given angle α for each specific instrument. Then proceed as in sub-Clauses 12, 13 and 14 of this Clause.

12 Either
(a) use the table constructed in sub-Clause 11 of this Clause to obtain the value of E_K,
or
(b) calculate the value of E_K, from the angle α measured in a test with no binder present on the test cube - see sub-Clauses 5(vi) and 8(viii) of this Clause.

Then, $E_B = E_T - E_K$

No correction is made either for the mass of binder adhering to the cube, or for the small permissible differences in the weight of cubes, or for the small initial angle of the pendulum.

13 The cohesion value C is given by:

$$C = E_B/A$$

In this case, A = 1 cm^2 so the Cohesion (J/cm^2) is numerically equal to the energy value E_B (Joules).

14 Plot the cohesion value results from tests over the range of temperatures on a graph having linear axes for temperature and cohesion. The scales of the graph shall be such that temperature values can be resolved to 1 °C and cohesion values can be resolved to 0.05 J/cm^2. Plot a smooth curve through the test values, and read off C_M and T_M from the curve.

Expression of Results

15 Results reported shall be expressed to the following accuracies:

C_M to the nearest 0.05 J/cm^2
T_M to the nearest whole °C.

Test Report

16 The test report shall contain not less than the following information:

(i) A reference to this Clause;
(ii) Details for the identification of the material tested;
(iii) Date of test;
(iv) The results obtained, including a graph of cohesion v temperature;
(v) Note of any adhesion failure at any temperature, as required in sub-Clause 8(v) of this Clause;
(vi) Any deviation from the procedures specified (e.g. sample preparation temperature due to elastic behaviour);
(vii) A record of the ambient temperature during testing measured to ±1 °C.

Interim Advice

FIGURE 9/3: Operating Principle of Pendulum

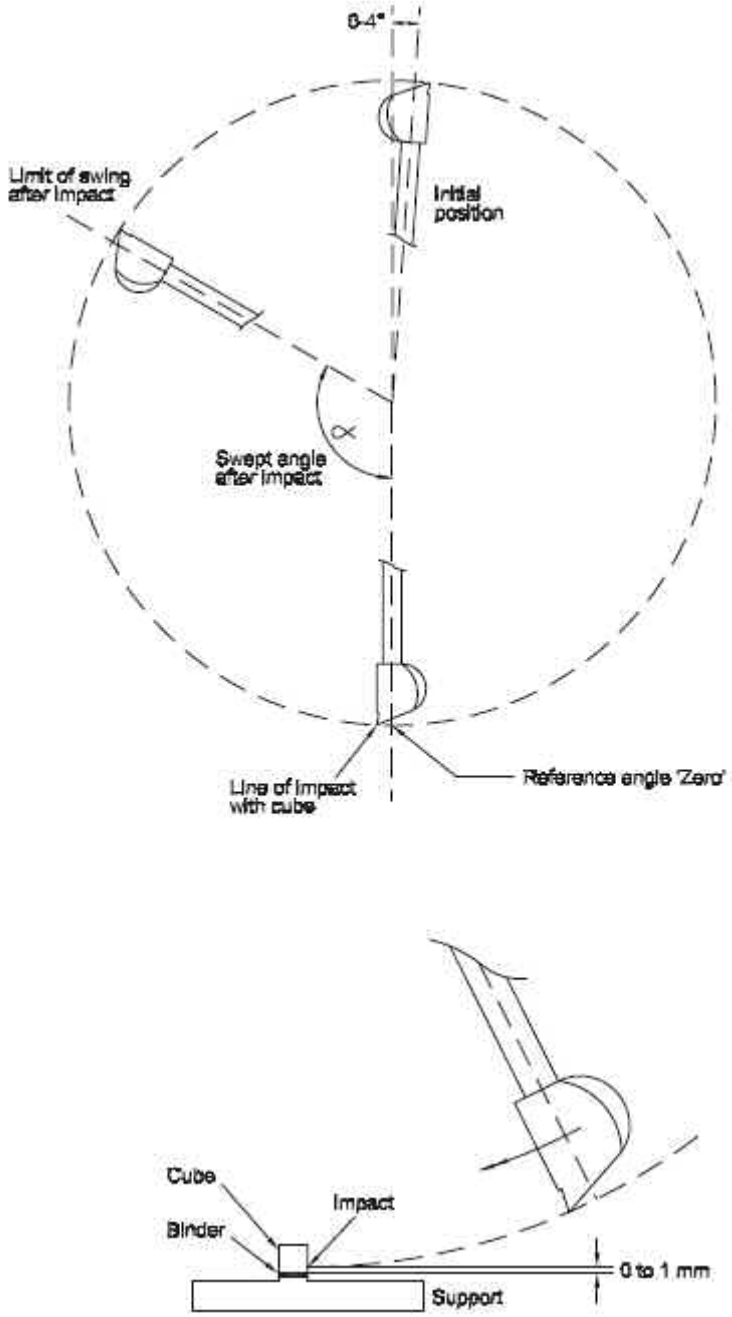

Note: The level of the cube support in relation to the pendulum fulcrum shall be such as to enable compliance with sub-Clause 939.5 (iii).

Figure 9/5: (05/01) Construction of Pendulum

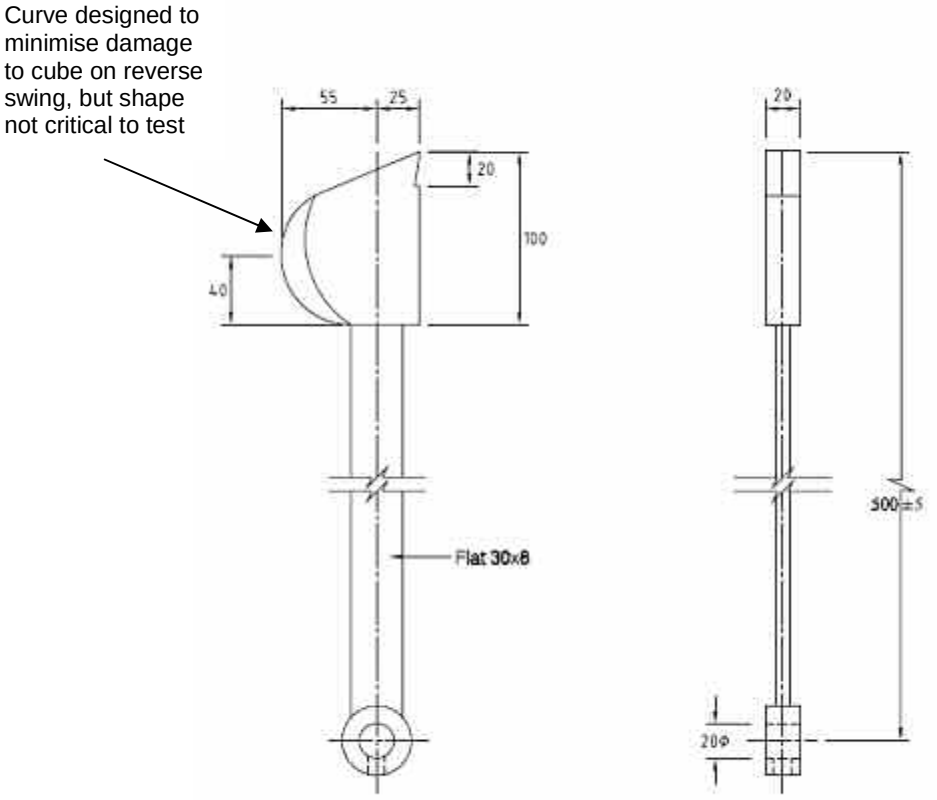

All dimensions in millimetres

Materials: Steel
Tolerance ± 0.5mm
Mass: 1910 ± 80g
Radius at point of impact: 500 ± 5mm
Distance from centre of
gravity to axis of Rotation: 295 ± 3mm

Interim

Figure 9/6: (05/01) Construction of Cube

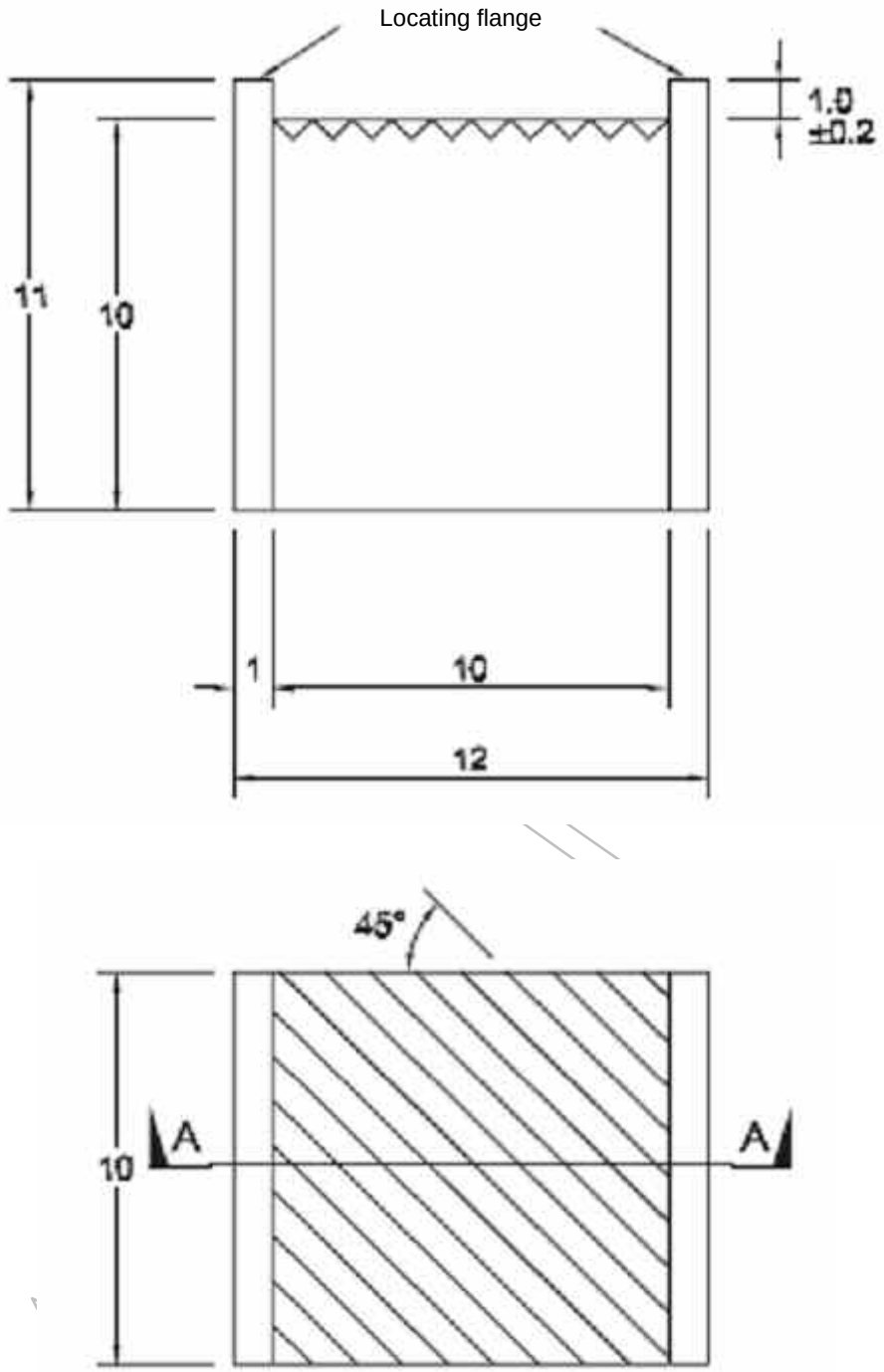

Typical form of serrations
All dimensions in millimetres

Materials: Steel
Mass: 9.25 ± 0.25g – to be adjusted by filling or drilling the face opposite the serrations

Tolerance on dimensions ±0.5mm except where indicated (11/04)
Cross section and pitch of serrations as cross section in figure 9/7 but their number will increase from that show because these are at 45°

Figure 9/7: (05/01) Construction of cube support

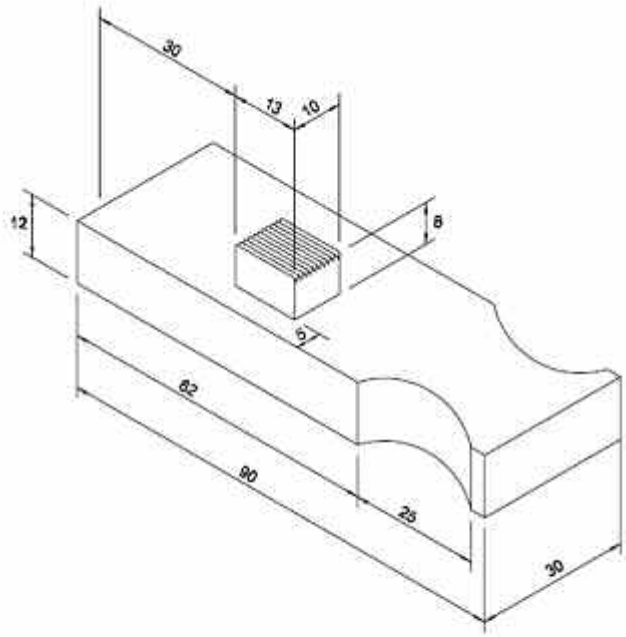

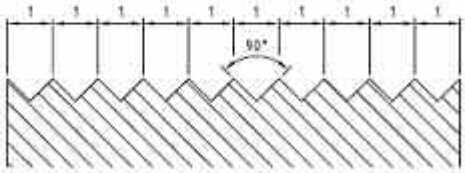

Typical form of serrations drawn for 1.0 pitch
Cross section A-A from Figure 9/6
All dimensions in millimetres

Material: Steel
Other dimensions to suit individual apparatus
Tolerance on dimensions ±0.5mm except for serrations which are ±0.1mm. The tolerance on the included angle between serrations is ±5° (11/04)

940 not used

941 Modified Binder Storage Stability

Scope

1 This test determines the susceptibility of a preblended modified binder to separation or instability during prolonged storage at high temperature.

Summary of Method

2 A sample of modified binder shall be contained in a closed vessel of specific dimensions and shall be maintained at 160 ± 2 °C for 7 days ± 2 hours. A binder sample shall then be taken from the top and bottom thirds of the vessel and both samples shall be tested for compliance with the binder specification.

Apparatus

3 The apparatus shall consist of:

(i) Cylinder, made of heat resistant glass, 190 ± 30 mm long and 65 ± 5 mm internal diameter having a removable lid, flush fitting to exclude air when the cylinder is filled with binder, and provided with three drain valves, one at the base, the other two spaced equally down the side of the cylinder, to allow the sample to be divided into three equal portions as in sub-Clause 4 (vii) of the procedure.

Alternatively, a thin-wall sheet metal tube or similar vessel such as a 500 ml beverage can, of similar dimensions to the glass cylinder, and having a similarly removable lid, fitted either with or without drain-valves.

(ii) Oven, electrically heated, fan assisted, and capable of maintaining a temperature of 160 ± 2 °C, having interior dimensions not less than 330 mm from the top of the heating element to the top of the chamber and not less than 305 mm in width and depth.

(iii) Tube holder, made of metal, that will hold either the glass cylinder or sheet metal can, in a vertical position, such that the base of the cylinder or can is not in direct contact with the oven floor.

(iv) Apparatus for determining the penetration and softening point of bitumen in accordance with BS EN 1426 and BS EN 1427.

(v) Transfer dishes (3), made of metal, each of a capacity sufficient to hold at least one third of the test sample.

Test Procedure

4 The procedure shall be as follows:

(i) The bulk sample of modified binder shall be obtained by sampling in accordance with BS EN 58.

(ii) Place the bulk sample of modified binder and the glass cylinder (or metal tube or equivalent vessel) in the preheated oven at 160 ± 2 °C for a period not exceeding 3.75 ± 0.25 hours.

(iii) Remove the bulk sample from the oven and thoroughly mix by stirring to ensure obtaining a representative test sample.

Interim Advice

(iv) Remove the glass cylinder (or metal tube or equivalent vessel) from the oven and completely fill with the modified binder test sample to allow no air space when the lid is fitted.

(v) Support the filled cylinder in a vertical position in the holder and transfer to the oven which shall be controlled at a temperature of 160 ± 2 °C and allow to stand undisturbed for a period of 168 ± 2 hours.

(vi) If a vessel having drain-valves has been used for the test proceed using Method A below, otherwise proceed using Method B.

(vii) **Method A**

(a) Remove the glass cylinder (or alternative approved vessel) from the oven, keeping the cylinder vertical.
(b) Open the uppermost drain-valve and run off the top third portion of the test sample into a transfer dish for testing.
(c) Open the middle drain-valve and run off the middle third portion of the test sample into a suitable container and discard.
(d) Open the lower drain-valve and run off the bottom third portion of the test sample into a transfer dish for testing.

(viii) **Method B**

(a) Remove the tube or vessel containing the test sample from the oven and allow it to cool at room temperature for 2 ± 0.25 hours whilst maintaining the vessel vertical in the holder.
(b) When the vessel of modified binder has cooled to ambient temperature, remove it from the tube holder and make two cuts through the vessel and the sample at positions one-third and two-thirds of the length from, and parallel, to the base.
(c) Retain the top and bottom thirds of the test sample for further testing and discard the middle third.

(ix) Determine the penetrations and softening points of the top and bottom thirds of the test sample, in accordance with BS EN 1426 and BS EN 1427.

Reporting

5 For both the top and bottom thirds of the test sample the following shall be reported:

(i) The penetration, to BS EN 1426.
(ii) The softening point, to BS EN 1427.
(iii) Whether Method A or Method B was used.
(iv) The location and date of obtaining the bulk sample, and the dates of test.

942 Thin surface course

1 Thin surface course systems shall have a British Board of Agrément HAPAS Roads and Bridges Certificate applicable to the combination(s) of traffic level and site classification specified in Appendix 7/1.

2 Thin surface course systems that are mixed hot as asphalt shall be produced in plants that are registered to the BS EN ISO 9001 ‘Sector Scheme for the Production of Asphalt Mixes’. Thin surface course systems that are produced using surface dressing techniques shall be produced by companies that are registered to the BS EN ISO 9001 ‘Sector Scheme for the Production of Surface Dressing’. Thin surface course systems that are produced using slurry surfacing techniques or any other technique not covered above

shall be produced by companies registered to the relevant BS EN ISO 9001 sector scheme if such a scheme is in place. The composition of thin surface course systems produced under a sector scheme shall not be tested under this contract other than for audit purposes unless some obvious variation in production occurs (e.g. binder drainage is observed for the first time).

Test Certificates and Material Samples

3 The Contractor shall provide a copy of the British Board of Agrément HAPAS Roads and Bridges Certificate for the system together with the associated Quality Plan and Installation Method Statement. The thin surface course system shall be manufactured, transported and laid in accordance with these documents. In particular, the material shall be manufactured at a plant that has been notified to the British Board of Agrément by the Certificate Holder, prior to the commencement of work to this Clause, and shall be laid by an installer approved by the Certificate Holder.

4 When required for audit purposes the component materials (including, where relevant, their nominal sizes) and their relative proportions and/or spread rates for use in the Permanent Works shall be notified to the Overseeing Organisation. The component materials listed shall include, as appropriate, coarse aggregates, fine aggregates, filler, additives (including fibres), binder, modifier and bond coat, and shall be subdivided into layers if applied using surface dressing or slurry surfacing techniques. Where a thin surface course system is not produced under a sector scheme as defined in sub-Clause 942.2, the Quality Plan and Quality System shall be acceptable to the British Board of Agrément.

5 Coarse aggregate shall be crushed rock or steel slag complying with Clause 901 when tested in accordance with the procedures of BS EN 13043. The coarse aggregate shall additionally have the following properties.

(i) Polished Stone Value (PSV) – as specified in Appendix 7/1 - BS EN 13043, clause 4.2.3.
(ii) Aggregate Abrasion Value (AAV) - as specified in Appendix 7/1 - BS EN 13043, clause 4.2.4.
(iii) Los Angeles Coefficient (LA) – not greater than LA_{30}. - BS EN 13043, clause 4.2.2.
(iv) Flakiness Index (FI) - not more than FI_{20}. - BS EN 13043, clause 4.1.6.

The Contractor shall supply the Overseeing Organisation with test certificates stating the properties of the aggregate to be used.

6 If required, samples of aggregate, bond coat or binder, modified or unmodified bitumen from either the spray bar or storage tank or mixed bituminous materials from the pavement surface or other suitable sampling point shall be supplied to the Overseeing Organisation.

Performance Levels

7 The wheel-tracking levels of the thin surface course system, as recorded on the British Board of Agrément HAPAS Roads and Bridges Certificate, shall be Level 3 unless otherwise specified in Appendix 7/1. For thin surface course systems whose maximum thickness is less than 20 mm and no deformation resistance information is given, Level 3 is assumed.

8 If required, the road/tyre noise level of the thin surface course system shall be specified as 0, 1, 2 or 3 in Appendix 7/1.

Layer Thickness

9 When required, the minimum and/or maximum compacted thickness of the thin surface course system shall be as specified in Appendix 7/1.

10 Where necessary, existing surfaces shall be regulated in accordance with Clause 907, prior to laying surfacing material to this Clause. Evidence that the deformation resistance of material used for regulation is capable of complying with the requirements of sub-Clause 942.7 shall be provided to the Overseeing Organisation except that, if the combined maximum thickness of the regulating material and/or of the thin surface course system is more than 20 mm, evidence of the deformation resistance of the combined layers shall be provided.

Surface Preparation

11 Surface preparation shall be in accordance with the Installation Method Statement provided in accordance with sub-Clause 942.3. Notwithstanding:

(i) Existing surfaces shall be cleaned using steel brooms and suction sweeping or other appropriate means. The surface may be moist but not wet; standing water shall not be present. All mud, dust, dirt and other debris and organic material shall be removed.

(ii) Ironwork shall be lifted to its final level before surfacing is carried out except where the installation method statement specifically states otherwise. Unless raised prior to surfacing, ironwork and reflecting road studs shall be located for lifting and resetting after completion of surfacing works. Fire hydrants and other safety related ironwork shall be uncovered immediately after completion of rolling. Gullies shall be covered prior to surfacing.

(iii) Where possible, existing road markings shall be removed.

Transportation

12 Transportation of the thin surface course system and/or its components shall be in accordance with the Installation Method Statement provided in accordance with sub-Clause 942.3. Notwithstanding, hot bituminous materials shall be transported in accordance with sub-Clause 903.6.

Surface Macrotexture – Untrafficked

13 The macrotexture depth of the thin surface course system after compaction has been completed and before opening to traffic shall be in accordance with Clause 921.

Surface Macrotexture - Performance Guarantee

14 For a period of two years from the date of the Contract completion, the Contractor shall guarantee that the average macrotexture, measured using the volumetric patch technique described in BS EN 13036-1, will be maintained above 1.0 mm or the minimum permitted value specified in Appendix 7/1, for each lane kilometre or the complete carriageway lane where this is less than 1000 m. When necessary, to demonstrate compliance, the macrotexture shall be measured in accordance with BS EN 13036-1 in the most heavily trafficked lane at 10 m intervals. The average value of a set of 10 individual measurements taken along the centre of the most heavily worn wheel-track shall not be less than 1.0 mm or the minimum permitted value specified in Appendix 7/1.

Surfacing Integrity – Performance Guarantee

15 On the trunk road network the Contractor shall guarantee the integrity of the surfacing and the workmanship for a period of five years from the date of opening to traffic, unless otherwise specified in Appendix 7/1.

16 The five-year guarantee shall include for defects such as fretting, raveling, stripping and loss of chippings. The guarantee shall exclude defects arising from accidental damage or damage caused by settlement, subsidence or failure of the underlying carriageway on which the surfacing material has been laid.

943 Hot Rolled Asphalt Surface Course and Binder Course (Performance-Related Design Mixtures)

1 Hot Rolled asphalt performance related design surface course and binder course shall conform to BS EN 13108-4, to the detailed requirements from BSI PD 6691 Annex C section C.2.5.1.3, the requirements of this Clause and those specified in Appendix 7/1.

Layer Thickness

2 The nominal thickness of the hot rolled asphalt surface course layer shall be either 45 mm or 50 mm unless otherwise specified in Appendix 7/1.

Binder and Binder Modification

3 Bitumen processed during refining to provide a binder with enhanced properties without the addition of a modifier, shall have a British Board of Agrément HAPAS Roads and Bridges Certificate.

4 for binders without BBA HAPAS certification, the Contractor shall provide data sheets giving details of the properties of modified binders, whether the modifier is pre-blended with bitumen, the bitumen is modified during refinery processing or modified by addition into the asphalt mixer, including those specified in Appendix 7/1. These shall include rheological data in accordance with Clause 928 and cohesion in accordance with Clause 939. Without BBA HAPAS certification, polymer modified binders, modified binders or additives shall not be used without the approval of the Overseeing Organisation.

Coarse Aggregate

5 Coarse aggregate shall be crushed rock or slag complying with BS EN 13043 and Clause 901. The resistance to polishing of the coarse aggregate for surface course shall comply with category PSV_{44} in accordance with BS EN 13043, clause 4.2.3.

Deformation Resistance

6 The resistance to permanent deformation of the mixture shall be in accordance with the appropriate class selected from Table C.3 of PD 6691, as specified in Appendix 7/1.

Coated Chippings for Surface Course

7 When required, coated chippings shall be 14/20 mm or 8/14 mm size as specified in Appendix 7/1 and comply with Clause 915.

Surface Macrotexture for Surface Course

8 The surface macrotexture shall comply with Clause 921.

Compaction Control Procedures

9 Control testing for compaction and resistance to permanent deformation shall be carried out in accordance with BS 594987 section 9.5.2.

10 When specified in Appendix 7/1, the resistance to permanent deformation of material laid in the permanent works shall be monitored by testing in accordance with clause F.3 of BS 594987 Annex F. Six cores shall be taken from the first kilometre length of material from each mixing plant and thereafter one further core from each subsequent lane kilometre. Results shall be assessed on successive rolling means of sets of six consecutive results and

shall be deemed to conform if the mean is no greater than the specified value and individual values not more than 50% greater than the specified value.

Trafficking Newly Laid Surfacing

11 The Contractor shall ensure the pavement material has adequately cooled and hardened before the road is opened to traffic. Unless otherwise agreed by the Overseeing Organisation, the road shall not be opened to traffic if its surface temperature exceeds 25°C unless the maximum temperature within the mat has fallen below 35°C.

944 Not used

945 Weather Conditions for Laying of Hot Bituminous Mixtures

1 The Contractor shall take account of the weather conditions when planning his working methods. The Contractor's working methods shall comply with all weather-related requirements of BS 594987 and any additional requirements of this clause. When laying is to be undertaken during winter (October to April) and/or night time (9 p.m. to 6 a.m.), the contractor shall work to a Quality Plan that allows for the specific issues raised by winter and/or night time working.

2 Hot bituminous materials laid less than 50 mm thick, other than those supplied to Clause 942, shall be laid within the wind speed and temperature constraints of Figure 9/8.

Thin Surface Course Systems

3 The weather conditions for laying thin surface course systems shall comply with those identified as being acceptable in the British Board of Agrément HAPAS Roads and Bridges Certificate for the system together with the associated Quality Plan and Installation Method Statement.

Hot Rolled Asphalt with pre-coated chippings

4 Hot rolled asphalt surface course mixtures incorporating 35% coarse aggregate with pre-coated chippings shall be laid 50 mm thick, within the following constraints of delivery temperature, wind speed and air temperature.

Air temperature (minimum):	0 °C
Wind speed (maximum at any air temperature):	40 km/h (at 2 m height) or 50 km/h (at 10 m height)
Minimum delivery temperature of materials:	155 °C.

Wind Speed

5 When measurements are required for assessment, wind speed shall be measured by anemometer positioned near the laying site to accurately reflect conditions at the laying site. The anemometer shall be fitted with a digital accumulative device.

Interim Advice

FIGURE 9/8: Wind Speed and Air Temperature Laying Restrictions for Layers less than 50 mm thick

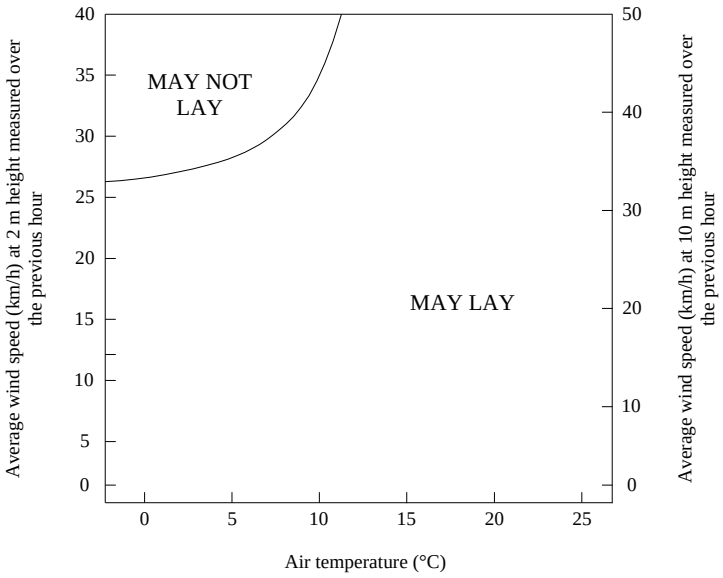

946 Not used

947 In situ Cold Recycled Bitumen Bound Material

Scope

1 In situ cold recycled bitumen bound material shall be designed and produced to form the foundation or main structural layer of the road pavement. The primary aggregate source shall be obtained by cold pulverisation of all, or part, of the existing road structure. The primary binder (stabilising agent) shall be a foamed bitumen, with cement or lime as an adhesion agent. The aggregate grading may be adjusted by the addition of a filler. Lime may also be used to modify any cohesive sub-grade soil incorporated in the pulverised layer.

2 Prior to commencing the pulverisation and stabilisation works, the Contractor shall demonstrate, to the satisfaction of the Overseeing Organisation, using the results of mix design procedures described in sub-Clauses 58 to 65 of this Clause, that the existing pavement materials in the sections of the works defined in Appendix 7/18 are capable of being recycled by pulverisation to form the primary aggregate component of an in situ cold recycled bitumen bound material which can meet the specified end-product performance requirements.

Component Materials

Aggregates and Fillers

3 The pulverised pavement material and any supplementary aggregate and/or filler shall normally be granular material with not less than 5% and not more than 20% passing the 0.063 mm sieve (Zone A graded material). Approval for use of pulverised granular material containing up to 35% passing the 0.063 mm sieve (Zone B graded material) shall require confirmation by the Overseeing Organisation, subject to the results of the mixture design procedures described in sub-Clauses 58 to 65 of this Clause.

4 The pulverised granular material shall contain not more than 2% of organic matter as determined in accordance with BS 1377-3 clause 3.

Bitumen Binder

5 The primary binder shall be foamed bitumen. The base bitumen shall comply with BS EN 12591 and shall be supplied from locations that are registered to BS EN ISO 9001 'Sector Scheme for the Supply of Paving Binders', described in Appendix A and shall normally be penetration reference 125. Subject to the results of the mixture design procedures described in sub-Clauses 58 to 65 of this Clause and approval of the Overseeing Organisation, the base bitumen may be a penetration reference up to 190.

6 Other than foaming agent(s), bitumen modifiers shall not be used unless approved by the Overseeing Organisation for special purposes or conditions.

7 The binder shall be transported to the site in tankers capable of maintaining the required temperature and a homogeneous binder consistency and transferred to the stabilising plant in a controlled and uniform manner.

8 The foaming of the bitumen shall be carried out within the spraybar system of the recycling machine and immediately mixed with the pulverised aggregate, at which point the foamed bitumen shall have a volume of not less than 10 times the volume of the base penetration grade bitumen.

Cement, Filler Aggregate and Lime

9 The constituents and required quality standards of hydraulic cement, filler aggregate and lime delivered to site shall be certified by the supplier, whose manufacturing and delivery processes shall be implemented using quality management systems in accordance with the BS EN ISO 9000 series of standards and certified by an accredited body.

10 Hydraulic cement as a filler aggregate or adhesion agent shall be Portland cement, Portland blast furnace slag cement or Portland PFA cement, in accordance with sub-Clause 1001.3.

11 PFA, used as a filler aggregate, shall be in accordance with BS 3892-1.

12 Lime for lime stabilisation (or as a modifier for plastic fines) shall, as required in Appendix 7/18, be either quicklime or hydrated lime, complying with sub-Clause 615.3.

Water

13 Water for moisture content control of the pulverised granular material, shall normally be obtained from a water company supply and used without testing. Water from an alternative source shall comply with BS EN 1008 and be approved by the Overseeing Organisation.

Pulverisation and Stabilisation

14 The Contractor shall satisfy the Overseeing Organisation that the plant used for pulverisation is capable of uniformly pulverising the existing road structure in a single pass, to the depth stated in Appendix 7/18. The plant used for stabilisation shall be capable of uniformly mixing controlled amounts of water and binder agent(s) into the full depth of pulverised layer. For either operation, the plant shall be equipped with a means of controlling the depth of processing to ±15 mm of the required depth.

15 The plant used for stabilisation shall be equipped with a spraybar system within the mixing chamber capable of producing and uniformly distributing foamed bitumen binder at a monitored and controlled rate. An accessible sampling jet shall also be fitted that produces foamed bitumen having the same characteristics as that produced by the main spraybar. Flow rate meters for measuring the supply rate of hot bitumen and other liquid additives to the mixture shall be capable of recording the correct rate of flow during all states of pipeline

flow (i.e. fully or partially charged). Evidence confirming the capabilities of the plant and the calibration of flow meters, shall be submitted to and approved by the Overseeing Organisation prior to the stabilisation works commencing.

16 The material shall be pulverised and stabilised in a single layer if its compacted thickness is 300 mm or less. If the compacted thickness is greater than 300 mm, the material shall be pulverised and stabilised in the minimum number of layers between 100 mm and 300 mm thick. Where more than one layer is required, the Contractor shall satisfy the Overseeing Organisation that the lower layer has achieved adequate stability in accordance with sub-Clause 31 of this Clause before proceeding with the overlying layer.

Pulverisation Process

17 Pulverisation of the existing road structure shall be carried out in a systematic pattern, to the required depth, to ensure that all parts of the existing road designated in Appendix 7/18 are included in the works. An overlap of at least 150 mm shall be made between adjacent passes of the machine. Any material missed along hard edges or around obstructions shall be excavated and placed in the path of subsequent passes of the machine until a uniform fully pulverised aggregate is obtained. The pulverised material shall not be contaminated by material drawn in from the verges.

18 All longitudinal and transverse joints shall be clean cut and vertical. Where work continues adjacent to previously recycled material, transverse joints shall be reformed a minimum 0.5 m into the previously treated construction. Where a layer of material for stabilisation is placed over a layer previously stabilised, the depth of pulverisation/stabilisation of the upper layer shall be set to cut into the underlying stabilised layer by at least 20 mm.

19 Excess pulverised material shall be removed by the grader and/or excavator for use elsewhere on site or transported to stockpile at locations given in Appendix 7/18. The surface of the layer shall be graded nominally to the required profile and provisionally compacted.

20 Moisture content of the pulverised aggregate immediately prior to stabilisation shall be measured in accordance with BS EN 1097-5 using the high temperature method. The moisture content shall be uniform throughout the layer within the range ±2% of the optimum moisture content for the unstabilised aggregate including any designed proportion of filler, determined in accordance with BS 1924-2, clause 2.1.4.

21 If the moisture content of the unstabilised pulverised aggregate fails to meet the specified moisture content range, corrective action shall be taken either by aeration to reduce the moisture content or by controlled addition of water to increase the moisture content.

22 Aeration of the affected area shall be achieved by full depth passes of the recycling machine to disturb and loosen the material and assist the evaporation of excess moisture. The material shall be kept in a loose condition until subsequent moisture content tests show that the treated material has reached the required moisture content range. The layer shall be re-graded nominally to the required profile and provisionally compacted in preparation for stabilisation.

23 An increase in moisture content of the affected area shall be achieved by the addition of water through an adjustable spraybar system in conjunction with full depth passes of the recycling machine to achieve a uniform distribution of the water throughout the layer. Increments of water shall be added and mixed in until subsequent moisture content tests show that the material has reached the required moisture content range. The layer shall be

re-graded nominally to the required profile and provisionally compacted in preparation for stabilisation.

Stabilisation Process

24 Stabilisation shall not be carried out during or after periods of rainfall where the duration and intensity are likely to cause the stabilised mixture to exceed the specified moisture content criteria and compromise the stability of the layer under compaction (as defined in sub-Clause 31 of this Clause). Stabilisation of frozen materials shall not be permitted.

25 Prior to stabilisation, pulverised materials within 100 mm of restricted hard edges such as kerbs and channels, or around obstructions such as gullies, shall be removed and spread uniformly over the remaining full width of the pulverised material.

26 Immediately prior to stabilisation, any filler and/or adhesion agent shall be spread uniformly over the full width of the layer using a mechanical spreader capable of distributing the material(s) in a uniform controlled manner. The rate of spread of these materials shall be calculated to achieve the mixture composition determined in accordance with sub-Clauses 58 to 65 of this Clause and monitored as the spreading operation proceeds in accordance with sub-Clause 35 of this Clause.

27 The stabilisation shall be carried out to the required depth in a systematic pattern similar to that used for the pulverisation process, with an overlap of at least 150 mm between adjacent passes of the machine. The bitumen binder shall be introduced as a foamed bitumen and distributed through the spraybar system directly into the rotor and mixing box of the stabiliser. The binder shall be supplied to the spraybar of the recycling machine by pumped pipeline from on-board tanks or from a tanker moving in tandem with the recycling machine. The rate of supply of the bitumen and any foaming agent, calculated to achieve the target binder content determined in accordance with sub-Clauses 58 to 65, shall be controlled and monitored as described in sub-Clause 36 of this Clause.

28 The layer of stabilised material shall be graded to level and compacted within two hours of the final pass of the stabilising plant, unless a curing or “maturing” period of aeration is required. Any furrow formed by prior excavation of edge materials shall be re-filled by grading the adjacent stabilised material into the space using a minimum amount of re-working.

29 The compaction of each layer shall be carried out using compaction plant approved by the Overseeing Organisation, until such time as the in-situ density complies with sub-Clauses 40 and 41 of this Clause and the stabilised layer provides a stable and dense surface. Any open or segregated surface area shall be blinded using dry crushed rock fines.

30 The stability of the layer under compaction shall be deemed adequate if the finished surface does not shove, rut or exhibit transverse cracking under the load of subsequent construction traffic.

31 Where required by the Overseeing Organisation the stability of a layer in any area shall be assessed after a curing period of at least 24 hours by channelled trafficking using a rigid three-axle tipper truck loaded to a gross mass of 24 tonnes (assumed equivalent to three standard axles). The vertical deformation shall be measured in all wheel-tracks at monitoring points on each of 5 transverse sections set 1 m apart after 5, 15, 30 and 40 passes of the truck. The mean vertical deformations at the above trafficking increments shall be plotted against the respective number of truck passes and the mean vertical deformation corresponding to 100 standard axles shall be interpolated. The layer shall be deemed acceptable if the mean vertical deformation

corresponding to 100 standard axles is less than 10 mm.

32 On completion of compaction the surface shall be sealed using a sprayed membrane of Class K1–70 bitumen emulsion complying with Clause 920. The bitumen emulsion shall be sprayed at the rate stated in Appendix 7/18. Where the surface is opened to traffic, the sealing membrane shall be blinded with fine aggregate or sand applied at a rate of 5.5 to 7.0 kg/m^2.

Process Control

33 The condition or quality of the pulverised material or stabilised mixture shall be assessed for specification compliance on the basis of each 800 m^2 area of the works or part thereof, completed in the same working day.

34 The moisture content specified in sub-Clause 20 of this Clause shall be monitored using test specimens extracted from three bulk samples of pulverised aggregate taken from points evenly spaced along a diagonal bisecting the assessment area. The bulk samples shall comprise material taken from the full depth of the pulverised layer. The depth of pulverisation relative to the designed road level shall be measured and recorded at each point. The samples shall also be tested to determine the particle (or “lump”) size distribution in accordance with BS EN 933-1 (or by an amended method to obtain an early assessment of grading, provided correlation with the standard test method can be demonstrated). Where appropriate, the residue of the three samples shall be combined to form one bulk sample and the bitumen content of the pulverised aggregate determined in accordance with BS 598-102. If any adjustment of moisture content is carried out prior to stabilisation, subsequent samples shall be taken and further moisture content tests completed.

35 The rate of spread of cement, filler, hydrated lime or quicklime shall be measured by weighing the amount of material retained on each of five trays or mats of known area laid in the path of the spreading machine. The trays shall be positioned approximately at points equally spaced along a diagonal bisecting the area of coverage. The mean rate of spread and percentage addition of the material shall be determined and recorded for each assessment area.

36 The rate of supply of bitumen binder and any other fluids to the stabilising plant shall be set and continuously monitored using the appropriate flow rate meters on the stabilising plant. As a check at the start of each work period, the rate of supply of bitumen shall be determined from before and after dip measurements of the storage/delivery tanks, related to an area of stabilisation of not more than 250 m^2. The calculated supply rate of bitumen for each test area shall be recorded.

37 As directed by the Overseeing Organisation, where lime has been used to modify a cohesive soil component of the pulverised aggregate, the acceptability of the modified materials shall be tested in accordance with sub-Clause 615.13.

38 After stabilisation, prior to final compaction of the stabilised mixture, five samples of the stabilised material shall be obtained. Each sample shall be taken from a point equally spaced along a diagonal bisecting the area under consideration. The location of each sampling point shall be recorded. Each sample shall comprise at least 40 kg of material taken from the full depth of the layer. The depth of stabilisation relative to the designed road level shall be measured and recorded at each point. Where appropriate and as directed by the Overseeing Organisation, the depth measurements shall be made using a stringline stretched between points of known level.

39 In the field, each sample of the stabilised material shall be mixed in a tray and sufficient representative material taken to produce a 150 mm cube specimen, made in accordance with the relevant Clauses of Series 800. The refusal density for each cube sample shall be determined to the nearest 10kg/m^3. The remainder of each sample shall be retained in a sealed condition for subsequent testing on site or in the laboratory, as described in sub-Clauses 42, 43 and 46 of this Clause.

40 After trimming and final compaction of the stabilised layer, the in-situ bulk density shall be measured at 50 m intervals per lane, including points close to the material sampling points, using an indirect density gauge in direct transmission mode, to a depth within 25mm of the total layer thickness. The meter readings shall be verified periodically in accordance with BS EN 13286-2.

41 The in-situ bulk density values obtained shall be compared with the refusal density value obtained from the cube specimens at the respective sampling points.
The average in-situ bulk density of each set of five values shall be at least 95% of the cube refusal density, with no individual in-situ density value less than 93% of the respective refusal density.

42 Either on site or immediately on arrival at the laboratory, each of the five samples shall be tested for moisture content in accordance with BS 1377-2.

43 Either on site or within 24 hours of arrival at the laboratory, one 150 mm diameter by 75 mm to 100 mm high cylinder test specimen (briquette specimen) shall be manufactured from each of the five samples, compacted in a PRD mould to a target density of the average in-situ bulk density measured in the field. The final density of each briquette specimen shall be measured and using the respective moisture content
values, the dry density values shall be determined.

44 The curing history of the five briquette specimens prior to testing shall be recorded, which shall, as soon as possible after manufacture, include a period of 72 hours at a nominal temperature of 60 ºC. Immediately before testing, each briquette specimen shall be conditioned in air for a minimum period of 12 hours at 20 ºC and then tested in accordance with BS EN 12697-26 (ITSM method) to determine the Indirect Tensile Stiffness Modulus (ITSM) of the material. After removal from the test apparatus, each briquette shall be immersed in water at 20 °C for a minimum period of 24 hours, then re-tested to determine the ITSM of the material in a saturated state.

45 The air voids content of each briquette shall be determined in accordance with BS 598-104 except that the maximum density for the partially coated product, used in the air voids content calculation, shall be standardised using the maximum density determined for a fully coated laboratory prepared specimen. A sample of loose pulverised aggregate obtained prior to the addition of foamed bitumen shall be dried to constant mass at 50 °C. Sufficient hot penetration grade bitumen shall then be added in increments to the dried aggregate in a mechanical mixer until the mixture is visually fully coated (using of the order 4% of added bitumen). The coated specimen shall be tested to determine maximum density as specified in BS EN 12697-5.

46 The residue of the five samples of stabilised material shall be combined to form one bulk sample. From this bulk sample, four sub-samples shall be obtained. Three sub-samples shall be tested to determine the particle size distribution and one sub-sample to determine bitumen content in accordance with BS EN 12697-1. The added bitumen content shall be the measured bitumen content of the stabilised mixture, less the bitumen content of the pulverised aggregate prior to stabilisation.

47 The specification compliance criteria for the process control tests shall be as described in Table 9/7.

End Product Performance of In Situ Cold Recycled Bitumen Bound Material

48 The end-product performance of the in situ cold recycled bitumen bound material shall be assessed on the basis of measurements carried out in areas of 800 m^2 or part thereof completed each working day which match the areas defined in sub-Clause 33 of this Clause.

49 Within 24 hours of completion, the as-installed performance of the stabilised layer shall be evaluated using a dynamic plate loading or penetrometer technique to determine values of elastic modulus at points on a nominal grid pattern as described in Appendix 7/18. The elastic modulus at each point and the mean elastic modulus for the assessment area shall comply with the minimum standards stated in Appendix 7/18. Additionally, before proceeding with construction of the overlying pavement, the valuation process shall be repeated to demonstrate that the elastic modulus value at all points and that of the mean value have increased over the respective as-installed values by not less than the percentage values stated in Appendix 7/18. Where these criteria are not met, the full extent of the non-compliant material shall be determined and appropriate remedial measures implemented. Remedial action shall comprise either a delay in construction to allow further curing and stiffening of the layer to occur or a repeat of all or part of the recycling process, followed by re-evaluation, until a compliant material is achieved.

50 Within 270 days of completion of the surfacing works, a Falling Weight Deflectometer survey shall be carried out and analysed in general accordance with HD 29 (DMRB 7.3.2). In particular, the measurements shall be taken on the finished road surface in the nearside wheel path, at a uniform and maximum spacing of 10 m. The survey shall be carried out during a period when the pavement temperature at a depth of 50 mm is within the range 15 to 25 ºC. The FWD results shall be analysed using a linear elastic FWD back analysis computer program, with the pavement modelled as a two layer system. Layer 1 shall represent the combined design thickness of the bound materials (i.e. the combined recycled material and overlying surfacing materials) and layer 2 shall represent the unbound foundation layer of infinite depth. End product performance shall be defined in terms of the calculated stiffness of layer 1, uncorrected for temperature. Compliance shall be achieved when the rolling mean of 10 results is not less than the figure specified in Appendix 7/18 and no individual result is less than 85% of the figure specified.

51 In the event that the layer 1 stiffness requirement of sub-Clause 50 of this Clause are not met, the full extent of the non-compliant material shall be determined by further investigation involving coring and laboratory testing. For each area of non-compliance, cores shall be extracted through the full depth of the stabilised layer at locations directed by the Overseeing Organisation, at a minimum rate of one x 150 mm diameter core per 75 m^2.

Withdrawn

TABLE 9/7: Compliance Criteria for Process Control Tests on In Situ Cold Recycled Bound Material

Material property or characteristic	**Individual results**	**Mean from test set**
Relative in-situ density	93% Minimum	95% Minimum
Aggregate grading	In accordance with sub-clause 3 of this clause	
Added bitumen content	Target[1] = 0.6%	N/A
Moisture content	Optimum ± 3%	Optimum ± 2%
Layer thickness (site measurement)	± 25 mm of specified	± 15 mm of specified
Cement content (site rate of spread measurement)	Target ± 2%	Target ± 1%
Indirect Tensile Stiffness Modulus (ITSM) – dry specimens	2000 MPa minimum	2500 MPa minimum
ITSM – water saturated specimens	1500 MPa minimum	2000 MPa minimum
Percentage air voids content	12% maximum	9% maximum

Note: subject to the absolute minimum added bitumen content stated Appendix 7/18

52 The Contractor shall be responsible for extraction of the cores with the minimum of force or disruption. Air flush coring shall be allowed for materials that are disturbed by water flush coring. After extraction, each core shall be labelled and photographed and, prior to testing, shall be stored in sealed polythene bags, in a uniformly supported position, at a temperature of 20 °C ± 5 °C. The thickness of recycled layer shall be measured and recorded.

53 Reinstatement of all core holes shall be completed before opening the area to traffic.

54 If, at any of the prescribed core locations, it is not possible to extract an intact core of suitable size or condition for the end-product performance testing, using a maximum of three attempts in an area of 1.5 m radius, the material in the vicinity shall be deemed not to comply with the end-product performance specification.

55 In the laboratory, each of the cores extracted successfully shall be trimmed to remove surfacing materials and any underlying material prior to cutting into core test specimens between 75 mm and 100 mm high. Where possible, three test specimens shall be obtained from each core, one from the upper part, one from the centre and the other from the lower part.

56 All core test specimens thus obtained shall be tested in accordance with the standards described in Table 9/8.

Withdrawn

TABLE 9/8: Testing Standards for Core Specimens of In Situ Cold Recycled Bound Material

Test	Standard
Bulk density	BS EN 12697-6 & sub-Clause 39 of this Clause
Air voids content	BS EN 12697-8 & sub-Clause 45 of this Clause
Indirect Tensile Stiffness Modulus	BS EN 12697-26

57 The results obtained shall be used for assessing the expected performance of the stabilised material in the Works, in relation to the known performance of BS specified base materials. The stabilised material in the trial area shall be deemed acceptable if the compliance criteria described in Table 9/9 are met.

TABLE 9/9: Compliance Criteria for In Situ Cold Recycled Bound Material - Core Specimens from the Works

Material property or characteristic	Individual cores	Mean from core set
Core density relative to refusal density	93% minimum	95% minimum
Air voids content	9% maximum	7% maximum
Layer thickness (from core measurement)	± 25mm of specified	± 15mm of specified
Indirect Tensile Stiffness Modulus - dry	2000 MPa minimum	2500 MPa minimum

Mixture Design and Characterisation

58 Mixture design and characterisation of in situ cold recycled bitumen bound material for each site, or section of site, including details of filler, binder, adhesion and/or stabilising agent(s) and their quantities, shall be submitted to the Overseeing Organisation at least one week prior to commencement of the recycling works. Where the site investigation has identified significant variation of existing pavement materials between different sections of the site, a mix design shall be submitted for each section of the site. The proposed plan area and depth of the different sections, covered by each mixture design, shall be approved by the Overseeing Organisation.

59 The testing standards used for the mixture design of the recycled bitumen bound mixture shall be those listed in Table 9/10.

TABLE 9/10: Testing Standards for the Design and Characterisation of In Situ Cold Recycled Bound Material

Test	Standard
Moisture content	BS 1377-2
Bulk density	BS EN 12697-6
Air voids content	BS EN 12697-8 & sub-Clause 45 of this Clause
Grading and Binder Content	BS EN 12697-2
Indirect Tensile Stiffness Modulus	BS EN 12697-26

60 The aggregate used in the design and characterisation process shall be obtained from the appropriate section of the works and shall be representative in terms of component material proportions, of the pavement layers to be pulverised. The laboratory manufactured aggregate shall be pulverised or crushed such that it closely replicates the

Interim Advice

nature and grading of the pulverised aggregate and that the aggregate particle size distribution shall comply with sub-Clause 3 of this Clause.

61 The laboratory prepared aggregate shall be thoroughly mixed with measured proportions of the bitumen binder and adhesion agent(s) to produce at least three trial mixtures with different added bitumen contents. The penetration reference of the bitumen and the type of the adhesion agent(s) used in the trial mixtures shall be the same as those used in the finished works.

62 The different added bitumen contents of the trial mixtures shall be set at increments of between 0.5% and 1.0% in the range 3.0% to 6.0%, with appropriate allowance made for residual binder in any crushed asphalt component. From each trial mixture, four 150 mm diameter x 75 mm to 100 mm high, cylinder test specimens (briquette specimens) shall be compacted to refusal by vibratory compaction in a cylindrical metal mould, using the compaction mould assembly and vibratory hammer described in BS EN 12697-32. The bulk density of each cylinder shall be determined.

63 The briquette specimens shall be cured for a period of 72 hours at a nominal temperature of 60 ºC. Following this, the briquette specimens shall be conditioned in air for a minimum period of 12 hours at 20 °C and then immediately tested in accordance with BS EN 12697-26 to determine the ITSM. After further conditioning of the briquettes, immersed in water at 20 °C for a minimum period of 24 hours, the ITSM tests shall be repeated on each specimen.

64 The characteristics of the mixture to be used in the works, including any added water, shall be determined using the optimum ITSM (dry) values. If peak conditions are not clearly displayed then plateau characteristics shall be accepted and the lowest added bitumen content for which all the criteria defined in Table 9/11 are met, shall be used in the works subject to a minimum of 4.0% for mixtures containing only pulverised unbound or cement bound aggregate and 3.0% for mixtures containing only pulverised bitumen bound materials.

65 On the basis of the foregoing test results, the contractor shall declare details of the Job Standard Mixture(s) for the works, setting out target aggregate grading and type, added water content, adhesion agents and binder content, together with tolerances. The method of compaction shall be described such that the material to be utilised in the works meets the mixture.

TABLE 9/11: Acceptable Design and Characteristic Requirements for In Situ Cold Recycled Bound Material

Property or characteristic	Individual specimens	Mean from test set
Moisture content	N/A	Optimum ± 2%
Indirect Tensile Stiffness Modulus (dry)	2000 MPa	2500 MPa
Indirect Tensile Stiffness Modulus (wet)	1500 MPa	2000 MPa
Bitumen content	N/A	Target ± 0.5%
Particle size distribution	N/A	Zone A or Zone B
Air voids content	9% maximum	7% maximum

948 Ex-Situ Cold Recycled Bound Material

General

1 Ex situ cold recycled bound material (CRBM) comprises base and binder courses produced in a fixed or mobile mixing plant from graded aggregate processed from arisings from the excavation of roads and similar sources, blended if necessary with other aggregate

and bound with cementitious, hydraulic or bituminous binders, separately or in combination.. This Clause covers four generic material families: Quick Hydraulic (QH), Slow Hydraulic (SH), Quick Visco-Elastic (QVE) and Slow Visco-Elastic (SVE). The primary binder of these families of materials shall be as follows:

QH: Portland Cement as the main component and excluding bituminous binders.
SH: Hydraulic binders (e.g. PFA/lime and GBS/lime) excluding bituminous and Portland Cement;
QVE: Bituminous binder as the main component but also including Portland Cement.
SVE: Bituminous binder as main component but excluding Portland Cement.

2 Ex situ CRBM shall be designed to achieve the specified level of the appropriate end performance property

Quality Assurance
3 Ex situ CRBM shall be produced in plants that have a UKAS accredited ISO 9001 Quality Management System. The ISO 9001 Certificate scope shall include this activity.

Sourcing of aggregate
4 The quality plan shall contain details of all aggregates to be used in the CRBM. Aggregate may include:

(i) asphalt, concrete or granular material planed or excavated from a road or other paved area
(ii) primary, secondary or recycled aggregate from other sources
(iii) fillers from primary or secondary sources (e.g. PFA)

5 The processed aggregate including added filler shall not contain deleterious material that adversely affects the performance of the mixture.

Processing of aggregate
6 The quality plan shall describe how, in particular, highway arisings are to be processed, crushed, screened and stocked to enable consistent production of the CRBM in line with the Job Standard mixture.

Binders and other constituents
7 The bitumen and other constituents shall conform to the following standards:

(i) Bitumen emulsion shall conform to BS EN13808 and be used in accordance with BS 434-2
(ii) Cement shall conform to BS EN 197-1
(iii) Bitumen used for foaming shall conform to BS EN12591 and shall be grade 160/220 or harder
(iv) Granulated blast furnace slag (GBS) shall comply with EN 14227-2.
(v) Ground granulated blast furnace slag (GGBS) shall comply with EN 14227-2.
(vi) Lime shall comply with EN 14227-11
(vii) Fly ash (PFA) used as either as filler or pozzolan, shall comply with EN 14227-4.
(viii) Un-weathered 0/4mm Basic Oxygen Slag (BOS) slag fines used in SH material as activator/accelerator to the GBS shall comply with BS 6463 Part 102.

8 Subject to approval, other constituents including setting and hardening agents may be used to enhance the performance of the mixture. Water shall not contain material that adversely affects the performance of the mixture.

Job Standard Mixture

9 The composition of the job standard mixture shall be declared as follows:

(i) Source, origin and proportion of all aggregate constituents.
(ii) Combined target grading, including mineral binders and tolerances.
(iii) Source, origin and proportion of all binders.
(iv) Target moisture content.

10 The grading of the job standard mixture, i.e. the aggregate together with the other constituents including hydraulic binders, shall comply with one of the zones in Table 9/12.

11 Use of Zone B or C graded material shall be permitted only when the results of a full mix design showing compliance with the required 28 day performance properties are available or when evidence can be provided of satisfactory achievement of the performance requirements on an earlier contract with a similar composition.

Table 9/12: Particle size distribution of mixture for cold recycling

Sieve (mm)	Percentage by mass passing		
	Zone A	Zone B	Zone C
40	100	100	100
31,5	100	100	86-100
20	100	100	65-100
14	85-100	85-100	52-100
10	68-100	68-100	44-100
4	38-74	38-94	26-74
2	26-58	26-84	18-58
0,5	13-38	13-64	8-38
0,250	9-28	9-51	5-28
0,063	5-21	5-38	3-21

The binder addition shall comply with Table 9/13.

Interim Advice

Table 9/13: Minimum binder contents for ex situ construction by family and binder type

Family	OPC	Lime	PFA	GBS	GGBS	Bitumen*
QH	3%	-	-	-	-	-
	2%	-	4%			-
	2%	-		3%		-
	2%	-			2%	-
SH	-	2%	8%	-	-	-
	-	2%		6%	-	-
		2%	-	-	4%	
	-	1%	-	10%	-	-
	-	-	-	10%	-	-
QVE	1%	-	**	-	-	3%
SVE	-	1.5%***	**	-	-	3%

* foamed or emulsion (residual)

** PFA may be added as filler

***lime may be added for 'breaking' and adhesion purposes, and, if PFA included as filler, will contribute to strength

Mixture design validation

12 When a mix design validation is required it shall be carried out on aggregates and binders representative of those to be used on the works. The validation may be carried out on CRBM mixed either in the laboratory or on a pilot basis on a full scale plant.

13 The target mixture shall comply with sub-Clauses 5 and 6.

14 A preliminary exercise shall be undertaken to establish a target grading and suitable moisture content.

15 Representative samples of the mixture shall be taken and from these and 150mm diameter cylindrical specimens shall be produced in accordance with sub-Clause 14. These specimens shall be 150mm high for hydraulic bound mixtures and 70-75mm high for visco-elastic bound mixtures. The time between mixing and specimen production shall be in accordance with the setting times given in Table 9/16.

16 The density of each specimen shall be measured and using the respective moisture content values, the dry density values shall be determined. The cylindrical specimens shall be conditioned and tested in accordance with sub clauses 15 and 16 and the measured characteristics shall demonstrate compliance with the requirements of Table 9/14.

17 The performance properties of the conditioned specimens shall be declared. The results shall be considered as indicative only, as the compliance criteria apply only to the specimens prepared during the execution of the works.

Interim Advice

Table 9/14: Mix Design and End Product Requirements

Property or Characteristic All Materials		Mean from Test Set
QVE and SVE Materials (360 days*)		
Indirect Tensile Stiffness Modulus	Class B1	1900MPa
	Class B2	2500MPa
	Class B3	3100MPa
	Class B4	4700MPa
QH and SH Materials (360 days*)		

*Note: 360 days in situ or cured in accordance with sub clause 15.

Trafficking Trial

18 When specified in Appendix 7/1 a trafficking trial shall be undertaken to demonstrate that the CRBM is not prone to excessive rutting in its early life.

19 A trial area shall be laid using the materials and plant to be used in the main works and on a foundation typical of that in the main works. The trial area shall be left to cure for 24 hours and shall then be subjected to controlled trafficking. The trafficking shall be performed by a heavy goods vehicle with an axle configuration and loading typical of that to be encountered in the construction phase. The number of passes shall equate to the total expected amount of traffic to be carried during construction, with a default value equivalent to 100 standard axles.

20 The measured rutting in the trafficking trial shall be less than 10mm or that specified in Appendix 7/1.

Process Control

21 Production of the ex situ CRBM shall be subject to process control detailed in the quality plan and meeting the following requirements:

(i) There shall be a description of the plant and the production process, preferably including a flow diagram, detailing how material is to be produced in accordance with this specification.

(ii) Calibration schedules for all parts of the plant involved in determining mix consistency shall be provided. These shall be accompanied by calibration records.

(iii) Details of transportation shall be provided. These shall include the location of the mixing plant and the expected average time between mixing and laying. The Contractor shall record the duration between mixing and the completion of compaction at the site during the execution of the works.

(iv) Measures to avoid problems caused by extreme weather. In particular, production shall not proceed if the feedstock is frozen or excessively wet.

Incorporated

Inspection and Test

22 There shall be a schedule of inspection and test frequencies to be made during production of CRBM. This shall comply with the minimum frequencies in Table 9/15

Table 9/15: Minimum frequencies for inspection and test

Item	Inspection	Test
Aggregate stockpiles	Daily	Grading and moisture content Before production and weekly
Binders	On receipt	Supplier data
Combined grading of mixture	Continual	Daily
Moisture content of mixture	Continual	Daily

Laying

23 A written procedure for the laying of the ex situ CRBM shall be provided.

24 The plant used for placing Ex situ processed material shall be capable of laying the material without significant segregation, evenly and to the required thickness across at least one lane width.

25 A method for the making of longitudinal and transverse joints, appropriate to the type of CRBM being laid shall be provided.

Compaction

26 The compaction of each layer shall be carried out to a defined rolling pattern, to achieve the required in situ density and until the recycled layer provides a stable and dense tight surface. The stability of the layer after compaction shall be deemed adequate if the finished surface does not shove, rut or exhibit transverse cracking under the load of subsequent traffic. Open edges shall be protected from traffic.

27 After trimming and final compaction of the recycled layer, the in situ bulk density shall be measured using an indirect density gauge in direct transmission mode, to a depth within 25mm of the total layer thickness. The meter readings shall be verified periodically in accordance with BS EN 13286-2.

28 The in situ bulk density values obtained shall be compared with the refusal density value of the Job Standard Mix or of the refusal density of a specimen representative of the day's production. The average in situ bulk density of each set of five values shall be at least 95% of the refusal density, with no individual in situ density value being less than 93% of the respective refusal density.

Sealing

29 When specified in Appendix 7/1, the surface shall be sealed using a sprayed membrane of Class K1-40 bitumen emulsion complying with Clause 920. The bitumen emulsion shall be sprayed at a rate 1 to 1.5 l/m^2 to achieve a uniform and continuous seal to the surface of the layer. Where the surface is opened to traffic, the sealing membrane shall be blinded with fine aggregate or sand applied at a rate of 5.5 to 7.0 kg/m^2.

End Product testing

30 The end-product testing of the ex situ CRBM shall be assessed on the basis of representative specimens made up in accordance with the schedule in Appendix 7/1.

31 Representative samples of the ex situ CRBM shall be taken either at the mixing plant or from site. 150mm diameter cylindrical test specimens shall be manufactured in sets of six

by compacting to refusal in accordance with BS 598 Part 104. The height of the test specimens and the time period after mixing during which compaction must be completed shall be in accordance with Table 9/16.

Table 9/16: Setting times of cold recycled families

Family	Setting time under normal temperature conditions	Sample dimensions prepared to a target density	
		Diameter (mm)	Height (mm)
QH	2 hours	150	150
SH	24 hours*	150	150
QVE	2 hours	150	75
SVE	24 hours*	150	75

* can be longer depending on material composition

Conditioning and Testing of Samples

32 Prior to testing, specimens shall be conditioned in a controlled environment, sealed to keep the moisture in, as described in this clause. The purpose of this conditioning is to simulate the likely curing over the first year in the road.

33 Immediately after compaction, the cylindrical specimens, in their moulds shall be double wrapped in cling-film plastic using two separate sheets; each of which shall be sufficient to cover the entire circumference of the cylinder and the two ends of the specimen. Once wrapped in cling-film the sample shall be placed in a sealed plastic bag. Care shall be taken when handling the specimens not to damage the plastic bag or the underlying cling-film layer. The specimens should be stored in air or water at a temperature within 2 ^{o}C of the nominal conditioning temperature.

34 The following conditioning regimes shall apply:

(i) QH specimens shall be conditioned for a period of 28 days at a temperature of 20+2 ^{o}C.
(ii) SH and QVE specimens shall be conditioned for a period of 28 days at a temperature of 40+2 ^{o}C.

End Product Criteria

35 The minimum specification compliance criteria for the process control tests shall be as described in Table 9/17.

Table 9/17: End Product Criteria

Material property or characteristic	**Individual results**	**Mean from test set of six specimens**
Particle Size Distribution	Zone	-
Moisture content	±2%	-
Relative In situ density	93% minimum	95% minimum
Layer thickness	±25mm of specified	±15mm of specified
Indirect Tensile Stiffness Modulus or Indirect Tensile Test	N/A	Relevant value from Table 9/14 less 5%

In the event of test specimens failing to achieve the required indirect tensile test results, compliance shall be determined by the testing of cores extracted by dry coring after one year. The results shall be compared with the criteria in Table 9/14.

949 Repairs to Potholes and Depressions

1 Temporary repairs to small areas of surface courses including holes for road stud sockets shall be carried out in accordance with Appendix 7/22. Alternatively patching maybe carried out using proprietary in-situ repair systems incorporating indirect infra red heating having an appropriate British Board of Agrément HAPAS Roads and Bridges Certificate.

2 Temporary filling to depressions shall be carried out using a proprietary material specifically formulated to treat such depressions, all in accordance with Clause 955.

3 Permanent filling to depressions shall be carried out using material or recycling systems complying with Series 900 or having an appropriate British Board of Agrément HAPAS Roads and Bridges Certificate.

950 Surface Preservation Systems

1 Systems that are intended to extend the life of existing asphalt surfacing by the application of a proprietary liquid coating shall have British Board of Agrément HAPAS Roads and Bridges Certification to demonstrate their performance. Preservation systems without British Board of Agrément HAPAS Roads and Bridges Certification shall not be used without prior approval by the Overseeing Organisation.

951 Patching

1 Patching is defined as replacement of surface course, binder course and base where the materials are laid in small areas.

2 The existing defective surfacing and/or temporary filling of trenches and depressions shall be broken out so as to provide a cavity with straight vertical edges.

3 Joint edges shall be formed as specified in sub-Clause 903.22.

4 All loose material shall be removed off Site.

5 Replacement material shall be as specified in Appendix 7/1.

6 Bond coat shall be applied in accordance with Clause 920.

7 All construction layers shall be laid and compacted such that on completion each layer shall be at the same level as the adjacent course.

8 Alternatively patching may be carried out using proprietary in-situ recycling repair systems incorporating indirect infra red heating having an appropriate British Board of Agrément HAPAS Roads and Bridges Certificate.

952 Not used

953 Durability of Bituminous Materials - Saturation Ageing Tensile Stiffness (SATS) Test

Scope

1 This Clause specifies a test method to assess the durability of bituminous materials using the Saturation Ageing Tensile Stiffness (SATS) test described hereafter.

Interim Advice

Terms and Definitions

2 For the purposes of this Clause the terms and definitions given in BS 6100 shall apply, together with the following.

(i) Maximum Density: Mass per unit volume, without air voids, of a bituminous mixture at known test temperature.

(ii) Dry Bulk Density: Mass per unit volume, including the air voids, of a specimen at known test temperature.

(iii) Saturation Before Conditioning: The saturation of the mixture, determined as the calculated percentage of air voids filled with water after partial vacuum saturation, prior to conditioning as described in this Clause.

(iv) Unconditioned Stiffness: The stiffness modulus of the mixture as determined in accordance with BS EN 12697-26, Annex C, prior to conditioning as described in this Clause.

(v) Conditioned Stiffness: The stiffness modulus of the mixture as determined in accordance with BS EN 12697-26, Annex C, after conditioning as described in this Clause.

(vi) Stiffness Ratio: The ratio of the conditioned stiffness to the unconditioned stiffness

(vii) Saturation After Conditioning: The saturation of the mixture, determined as the calculated percentage of air voids filled with water after conditioning as described in this Clause.

Principle of Test

3 Nominally identical test specimens are subjected to moisture saturation by using a vacuum system. They are then transferred into a pressurised vessel partially filled with water, where they are subjected to a conditioning procedure at 85 °C temperature and 2.1 MPa pressure for 65 hours. The stiffness ratios of the individual specimens situated above the water are averaged to determine the sensitivity of the material to ageing and moisture. The whole process is referred to as the Saturation Ageing Tensile Stiffness (SATS) test. The average stiffness ratio is the SATS Durability Index of the mix components.

Materials

4 The following materials shall be used:

(i) Distilled water (or water of equivalent purity), freshly de-aired and cooled.

(ii) Self-adhesive aluminium foil: Capable of adhering to and covering the specimen with an impervious coating.

(iii) Absorbent paper towelling.

Test Apparatus

5 The following test apparatus as shown in Figures 9/9 to 9/11 shall be used:

(i) Vacuum desiccator and vacuum pump, including manometer or calibrated vacuum gauge as described in BS EN 12697-5.

(ii) Balance with sufficient capacity and accurate to 1.0g.

(iii) Pressure Vessel having the form and dimensions specified in Figure 9/9, similar to that described in BS EN 14769, and of sufficient capacity to accommodate 5 test specimens, of dimensions as described in sub-Clause 6 of this Clause, for a full test.

(iv) Test equipment capable of performing the Indirect Tensile Stiffness Modulus (ITSM) test on compacted bituminous mixture specimens in accordance with BS EN 12697-26, Annex C.

(v) Specimen tray, having the form and dimensions specified in Figure 9/10, to accommodate 5 test specimens for a full test. The tray shall sit in the pressure vessel on top of a porous disc as shown in Figure 9/11.

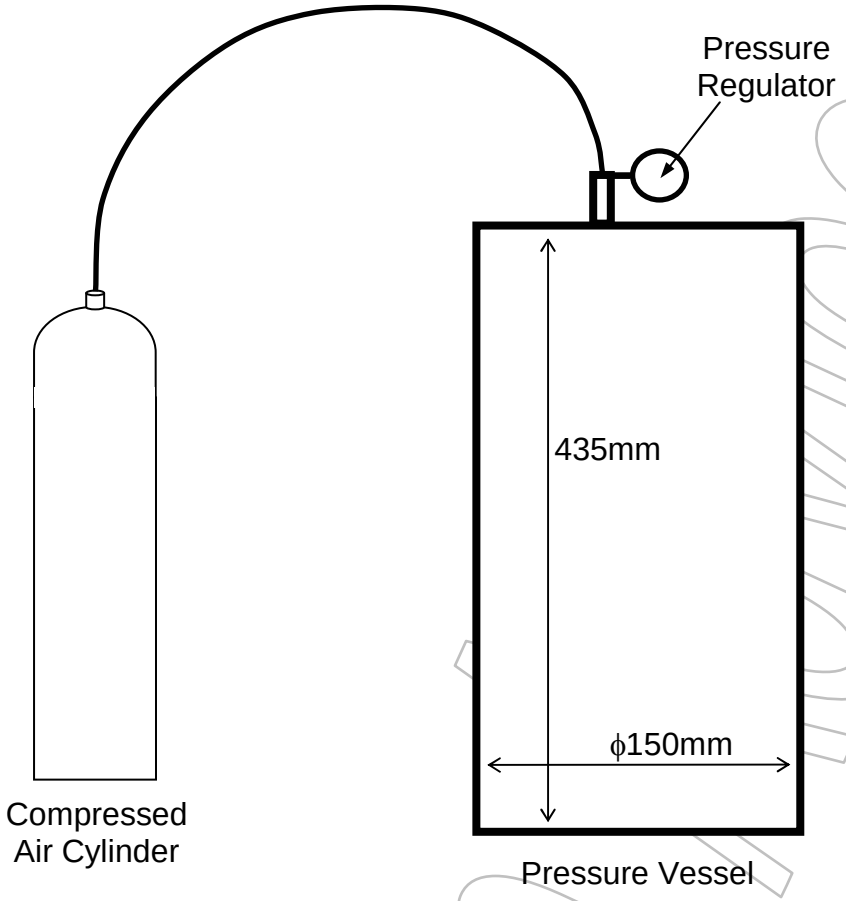

Figure 9/9: (08/04) Schematic and Dimensions of Typical Pressure Vessel
Note: All dimensions ±2 mm

Interim Advice

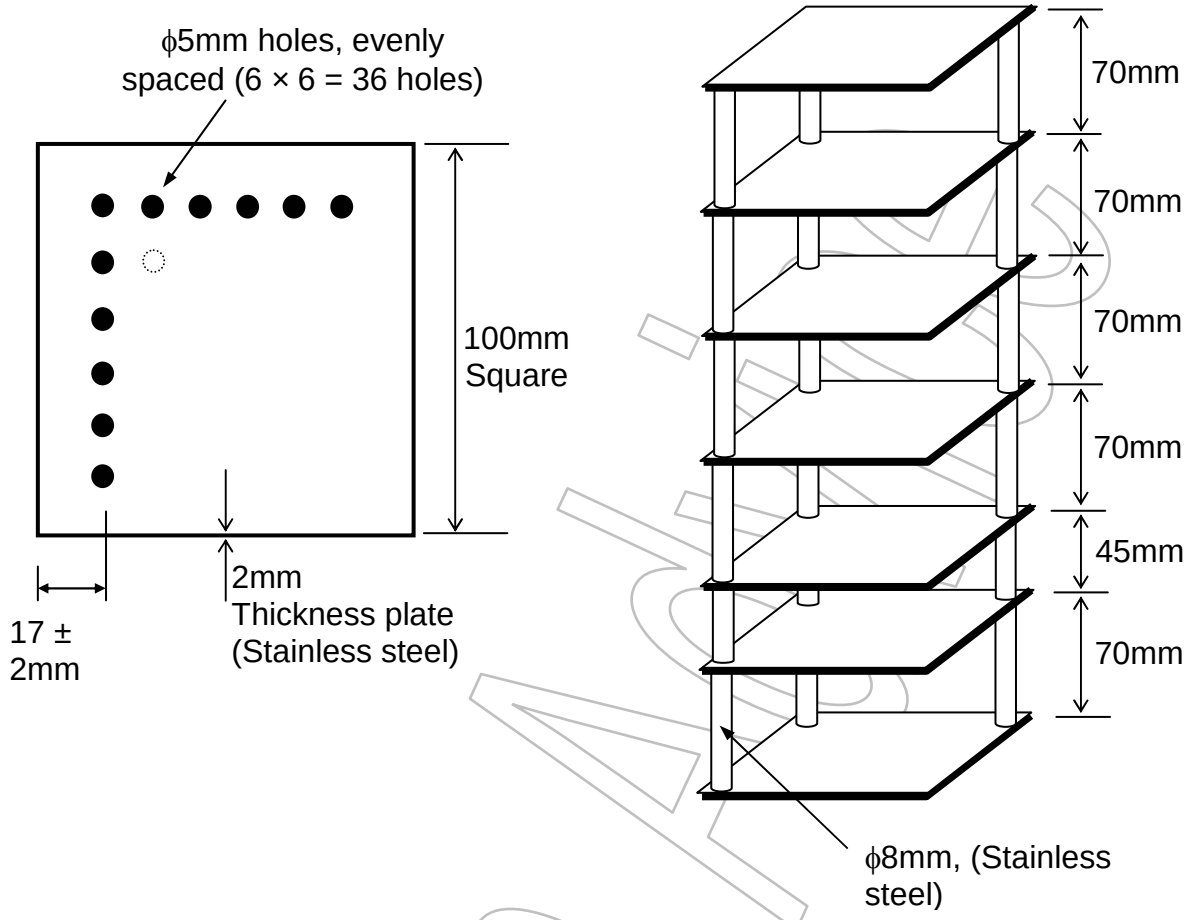

Figure 9/10: (11/04) Schematic and Dimensions of Typical Specimen Tray
Note: All dimensions ±0.5 mm except where indicated otherwise.

Interim Advice

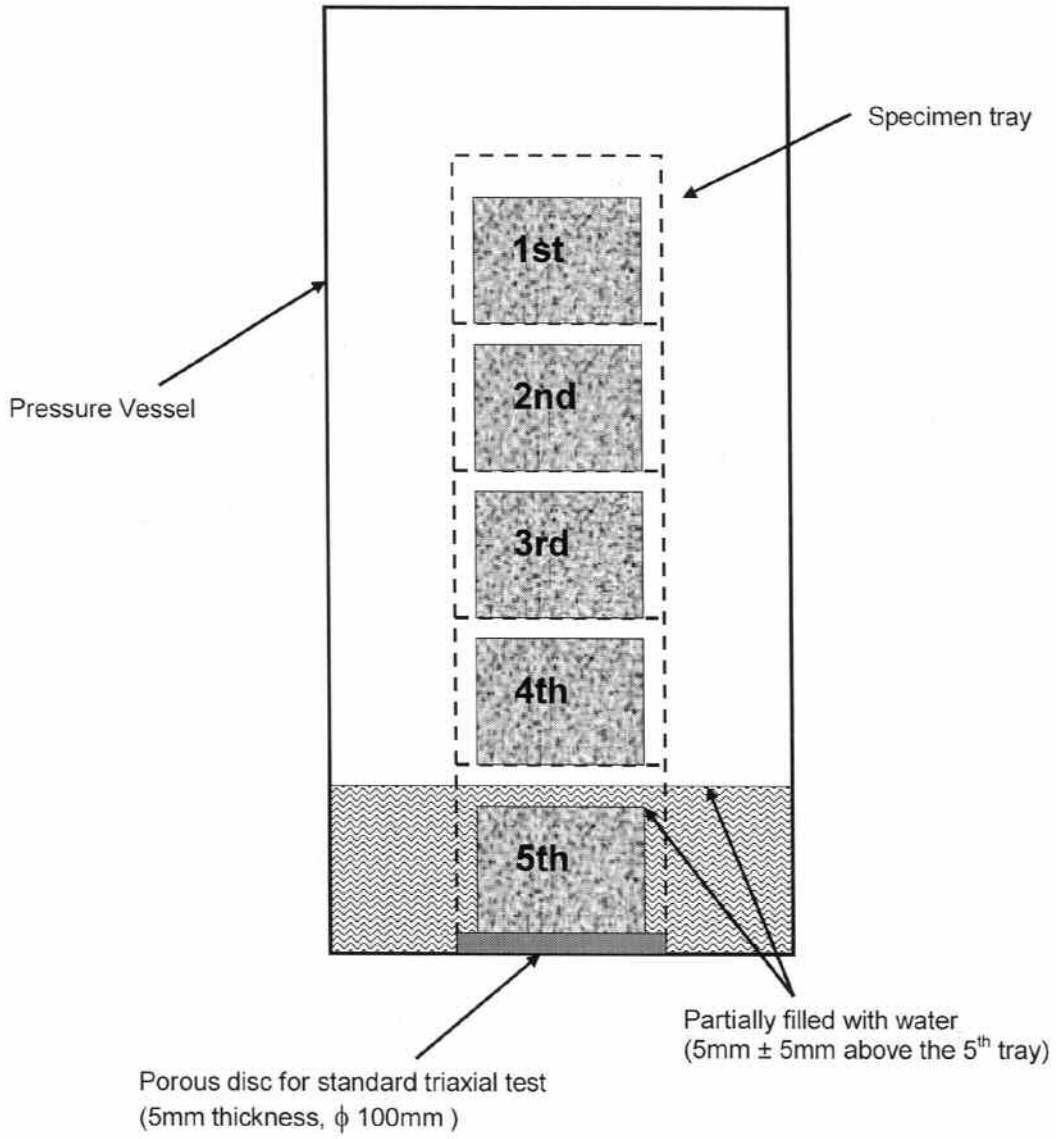

Figure 9/11: Schematic Diagram of the Specimen Configuration in the Pressure Vessel

Sample Preparation

6 Test specimens shall be cores of 100 +0, -5 mm diameter and 60 ± 5 mm thickness. Specimens shall be cored from a slab manufactured using a laboratory roller compactor in accordance with BS EN 12 697-33 to a void content of 8% ± 2%. The slab shall be produced using the recipe for the bituminous mixture to be tested except that a standard 10/20 penetration grade binder complying with TRL Report TRL 636 Annex A shall be substituted. Five nominally identical specimens are required for the full test. The cores shall be obtained by sawing approximately equal amounts from each end of the core taken from the slab which should be approximately 100 mm thick.

Procedure

7 The maximum density of the bituminous mixture under test shall be determined as described in BS EN 12697-5.

8 The dry bulk density of each compacted specimen shall be determined as described in BS EN 12697-6, Procedure C; self-adhesive aluminium foil shall be used to seal the specimen during immersion. Remove the foil after the test.

9 The air voids of each specimen shall be calculated as described in sub-Clause 953.22. Any specimen whose calculated air voids are outside the range 8 ± 2% shall be rejected and replaced with further samples of suitable void content.

10 The unconditioned (initial) stiffness modulus shall be determined at 20 ± 0.5 °C in the Nottingham Asphalt Tester (NAT). Designate this as ITSMU.

11 Determine the dry mass of each specimen using the balance and designate this as Md.

12 The specimens shall be partially saturated by placing them in the vacuum desiccator and covering them with distilled water at 20 ±1 °C. After sealing the apparatus, a vacuum shall be applied such that a residual pressure of between 40 and 70 kPa is reached in the vacuum desicator within 60 seconds. The residual pressure of between 40 and 70 kPa shall be maintained for 30 ± 2 minutes.

13 Remove each specimen from the vacuum desiccator, remove any water on its surface using the absorbent paper towelling and determine its wet mass. Designate this as Mw. The percent saturation (S) shall be determined as described in sub-Clause 953.23. Any specimens whose calculated saturation is greater than or equal to 80% shall be rejected and replaced with a core with a saturation of less than 80%.

14 Partly fill the pressure vessel with water. The water level shall be between the 4th and 5th specimen after loading the samples, as shown in Figure 9/11. Freshly distilled water only shall be used (do not re-use). The vessel and water shall be controlled to the target temperature for at least 2 hours before the conditioning procedure commences.

15 The specimens shall be placed into the vessel, using the specimen tray which shall be centrally placed in the chamber of the vessel, the cover closed and the pressure gradually increased from atmospheric pressure to 2.1 MPa over a period of 20 minutes. The conditioning procedure shall then be performed, as described in BS EN 14769, at 2.1 ± 0.1 MPa pressure and the target temperature of 85 ± 1°C for 65 ± 1h.

16 After the test period of 65 h has elapsed, adjust the target temperature to 30ºC. Leave the vessel for approximately a further 24h to cool to the adjusted temperature of 30ºC. Do not release the pressure.

17 When the pressure vessel display temperature has reduced to 30ºC (i.e., after the 24 h cooling period), the heater shall be turned off and the pressure shall be slowly released from the vessel. The pressure release mechanism shall be adjusted so that the pressure returns to atmospheric pressure over a period of 20 to 30 minutes (linear reduction). The cover shall then be opened and all the specimens extracted, on the tray, from the vessel.

18 Each specimen shall be surface dried using the absorbent paper towelling, and its wet mass measured within 3 minutes of removing the specimens from the pressure vessel. Designate this mass as M_{w2}. The saturation after the conditioning procedure (S_a) shall be calculated as described in sub-Clause 953.24.

19 The specimens shall be observed for any visual cracks and unusual appearance (eg. colour of binder or aggregates). Record any comments as appropriate.

20 The specimens shall be placed into the ITSM cabinet or other suitable temperature controlled conditioning environment at 20 ± 0.5°C in preparation for ITSM testing, as described in BS EN 12697-26, Annex C.

21 The stiffness modulus shall be determined as described in BS EN 12697-26, Annex C within 8h after turning off the heater on the pressure vessel. Designate this as ITSMC.

Calculation and Expression of Results
Dry bulk Density and Calculated Air Voids

22 Calculate the dry bulk density of each specimen (in Mg/m³) as follows:

$$\text{Dry Bulk Density } (G_{mb}) = \frac{A}{(B-C)-(\frac{B-A}{D})}$$

where:

A = the mass of the dry specimen in air (in g)
B = the mass of the coated specimen in air (in g)
C = the mass of the coated specimen in water (in g)
D = the density* of the self-adhesive aluminium foil in Mg/m³

* The material described in sub-Clause 953.4 (ii) has been found to have a typical density of 1.650Mg/m³

The specimen dry bulk density shall be expressed to the nearest 0.001 Mg/m³

The air voids of each specimen (in%) shall be calculated as follows:

$$\text{Air Voids} = \frac{G_{mm} - G_{mb}}{G_{mm}} \times 100$$

where:

G_{mm} is the maximum density determined in accordance with BS EN 12697-5
G_{mb} is the dry bulk density determined in accordance with BS EN 12697-6, Procedure C.

The calculated air voids shall be expressed to the nearest 0.1%.

Saturation Before Conditioning

23 Calculate the saturation before conditioning as follows:

$$S = \frac{M_w - M_d}{\frac{M_d}{G_{mb}} - \frac{M_d}{G_{mm}}} \times 100$$

where:

S = percent saturation before conditioning
M_d = mass of dry specimen, g
M_w = mass of wet specimen, g
G_{mb} = dry bulk density and
G_{mm} = maximum density

The saturation before conditioning shall be expressed to the nearest 1%.

Saturation After Conditioning

24 Calculate the saturation after conditioning as follows:

$$S_a = \frac{M_{w2} - M_d}{\frac{M_d}{G_{mb}} - \frac{M_d}{G_{mm}}} \times 100$$

where:

S_a = percent saturation after conditioning
M_d = mass of dry specimen, g
M_{w2} = mass of wet specimen (g) after conditioning
G_{mb} = dry bulk density and
G_{mm} = maximum density

The saturation after conditioning shall be expressed to the nearest 1%.

Stiffness ratio

25 Calculate the stiffness ratio as follows:

$$ITSM_R = \frac{ITSM_C}{ITSM_U}$$

where:

$ITSM_R$ = stiffness ratio,
$ITSM_C$ = conditioned stiffness
$ITSM_U$ = unconditioned stiffness

The stiffness ratio shall be expressed to the nearest 0.01.

Interim Advice

Test Report

26 The test report shall contain not less than the following information:

(i) Name of Laboratory carrying out the test
(ii) Date of test
(iii) Unique reference
(iv) A reference to this test method and test conditions
(v) Maximum density of the mixture tested, to the nearest 0.001 Mg/m³
(vi) For each specimen tested, report:
- Dry bulk density (G_{mb}), to the nearest 0.001 Mg/m³
- Percent air voids (V_v), to the nearest 0.1%
- Percent saturation (S) before conditioning, to the nearest 1%
- Percent saturation after conditioning, (S_a), to the nearest 1%
- Unconditioned stiffness ($ITSM_U$) to the nearest 100 MPa
- Conditioned stiffness ($ITSM_C$) to the nearest 100 MPa
- Stiffness ratio ($ITSM_R$), to the nearest 0.01
- Any cracks or unusual appearance

(vii) For the mixture tested, the stiffness ratio of the four individual specimens above the water shall be averaged and the average value reported.
(viii) To support ongoing research, the stiffness ratio of the individual specimens tested shall also be plotted against the corresponding saturation value after conditioning. The graph shall have linear axes for stiffness ratio (y axis) and saturation after conditioning (x axis). The scales of the graph shall cover a range of stiffness ratio of at least 0-1.0 and of saturation after conditioning of 0-100%.

27 The test report and graph, uniquely identified, shall be provided to the Overseeing Organisation with the Contractor's Proposal.

954 Method for Laboratory Determination of Interface Properties using the Modified Leutner Shear Test

Scope

1 This Clause specifies a laboratory test method to assess the bonding between adjacent asphalt pavement layers using cylindrical samples. It is also appropriate for asphalt applied to concrete.

Terms and Definitions

2 For the purposes of this Clause the terms and definitions given in BS 6100 shall apply, together with the following:

(i) Peak Shear Stress: The maximum value of shear stress, determined as the maximum force divided by the initial cross sectional area of a specimen when tested as described in this Clause.
(ii) Displacement at Peak Shear Stress: The displacement at the maximum value of shear stress of a specimen when tested as described in this Clause.
(iii) Shear Stiffness Modulus: The peak shear stress divided by the displacement at the peak shear stress of a specimen when tested as described in this Clause.

Principle of Test

3 Cylindrical test specimens of nominal 150 mm diameter shall be subjected to direct shear loading at 20 °C using the modified Leutner shear test. The maximum shear stress (in MPa) at the interface between layers shall be determined.

Interim Advice

Test Apparatus and Materials

4 The following test apparatus and materials shall be used:

(i) Shear test apparatus, as shown in Figure 9/12, composed of a base body (A) on which are fixed the sample support (B) and the lower shear ring (D). The upper shear ring (C) is attached to the upper body (E), which is movable along the guiding bars (F). The gap between shear rings (C and D) is 5mm.
(ii) Loading frame capable of achieving a constant vertical displacement rate of 50.0 ± 2mm per minute and a maximum load of at least 50kN.
(iii) Data logging system to record load and displacement during the test.
(iv) Metal extension, as shown in Figure 9/13.
(v) Stiff adhesive, such as epoxy resin, with sufficient strength to avoid failure within the adhesive or at the adhesive/asphalt material interface.

Sample Preparation

5 Test specimens shall be cores of 150 ± 2 mm diameter; the minimum thickness of the layers above and below the interface to be tested shall be 15mm and 60mm respectively. Specimens shall be cored from an in-service pavement or from a slab manufactured using a laboratory roller compactor in accordance with BS EN 12697-35 and BS EN 12697-33. If the thickness of the layer above the interface is between 15 and 30 mm, a metal extension shall be glued on top of the layer above the interface.

Procedure

6 The diameter and thickness of the specimen shall be determined to the nearest mm.

7 The specimen shall be placed into a suitable temperature controlled conditioning environment at 20 ± 0.5 °C for a minimum of 5 hours.

8 The appropriate shear rings, to form a loose fit around the specimen (for example, 151 mm diameter shear rings for a 150 mm diameter specimen), shall be selected and attached to the Leutner test frame.

9 The specimen shall be placed into the test apparatus and the interface aligned, (Figure 9/12 (G)), between the upper and lower shear rings (Figure 9/12 (C and D)). If a metal extension is used, the specimen shall be placed into the test apparatus so that the direction of the grooves is perpendicular to the direction of the applied shear load.

10 Tighten the sample support using a suitable spanner.

11 The test apparatus shall be placed into the loading frame and adjusted until the upper shear ring (Figure 9/12 (C)) nearly touches the specimen.

12 Start the data logging system (to record load and displacement) and commence shear loading. The loading rate shall be 50.0 ± 2 mm per minute.

13 Record the load (F) to the nearest 0.1 kN and the displacement (δ) to the nearest 0.1 mm.

14 Stop the shear loading when the test frame reaches its limit of 7mm displacement. The length of time between removal of the specimen from the temperature controlled conditioning environment and completion of testing shall not exceed 15 minutes.

15 After the test has been completed, the apparatus shall be dismantled and the specimen removed.

16 Both sections of the specimen shall be observed (especially the interface) for any visual cracks and unusual appearance (i.e. crushed aggregates on edges). Record any comments as necessary.

Calculation and Expression of Results

17 Calculate the shear stress as follows:

$$\tau = \frac{F}{\pi r^2}$$

Where:

τ = shear stress in (MPa)
F = load (in kN)
r = initial radius of specimen (in mm)

18 Produce a shear stress versus shear displacement graph (an example is shown in Figure 9/14) using the recorded data.

19 Determine the following parameters from the graph:

(i) τ_{max} = peak shear stress, MPa, expressed to the nearest 0.1
(ii) δ_{max} = displacement at peak shear stress, mm, expressed to the nearest 0.1
(iii) k = shear stiffness modulus = τ_{max}/δ_{max}, MPa/mm, expressed to the nearest 0.1

Test Report

20 The test report shall contain not less than the following information:

(i) A reference to this test method and test conditions.
(ii) Material descriptions for both layers.
(iii) Type and amount of tack (bond) coat (if known).
(iv) For each specimen tested, report:

- specimen diameter, expressed to the nearest mm
- layer thicknesses, expressed to the nearest mm
- maximum load (F), expressed to the nearest 0.1 kN
- peak shear stress (τ_{max}), expressed to the nearest 0.1 MPa
- displacement at peak shear stress(δ_{max}), expressed to the nearest 0.1 mm
- shear stiffness modulus (k), expressed to the nearest 0.1 MPa/mm
- any cracks or other damage.

(v) The test temperature, expressed to the nearest 0.5°C
(vi) The use (or otherwise) of a metal extension.

Interim Advice

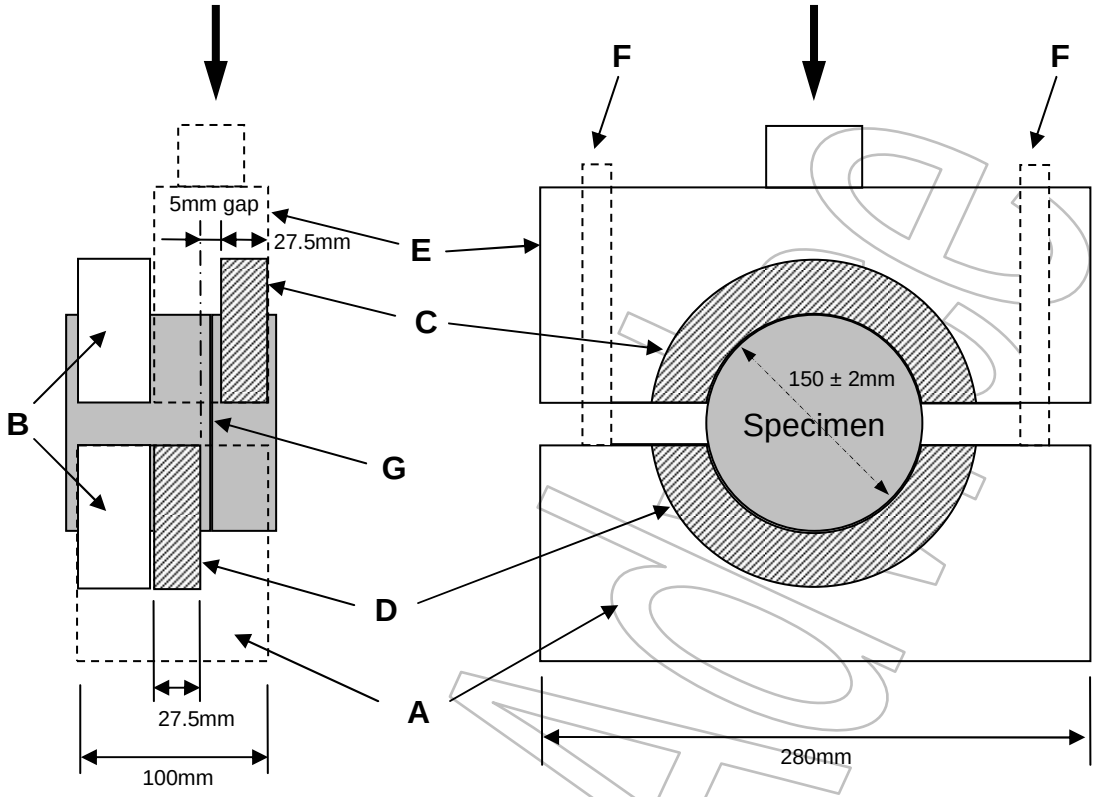

A – base body
B – sample support
C – upper shear ring
D – lower shear ring
E – upper body
F – guiding bar
G – specimen interface

Figure 9/12: Schematic diagram of the modified Leutner shear test apparatus

Interim Advice

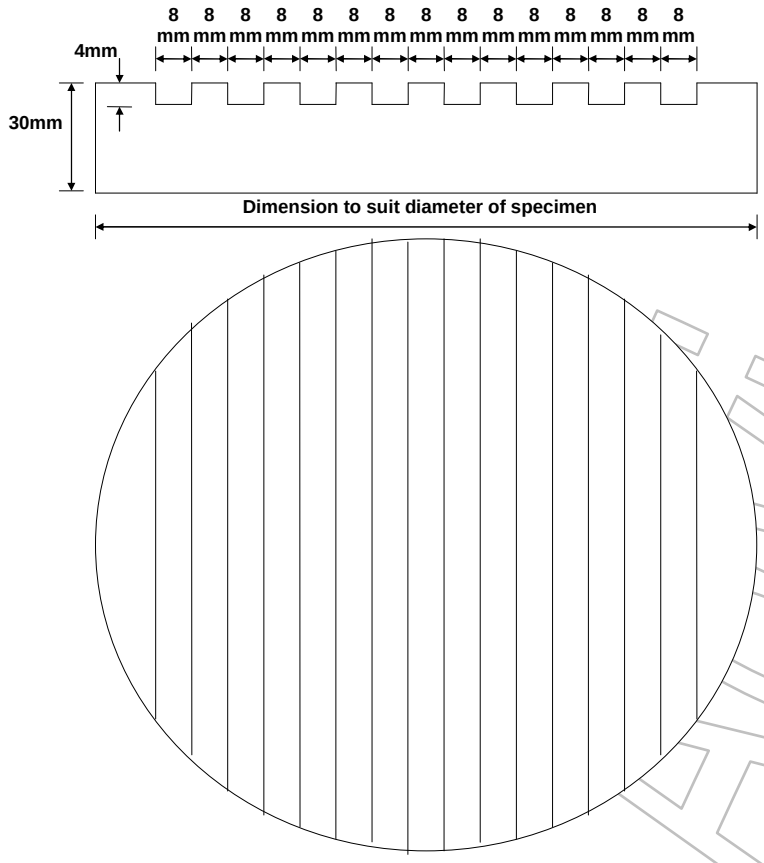

Figure 9/13: (11/07) Schematic drawing of the metal extension

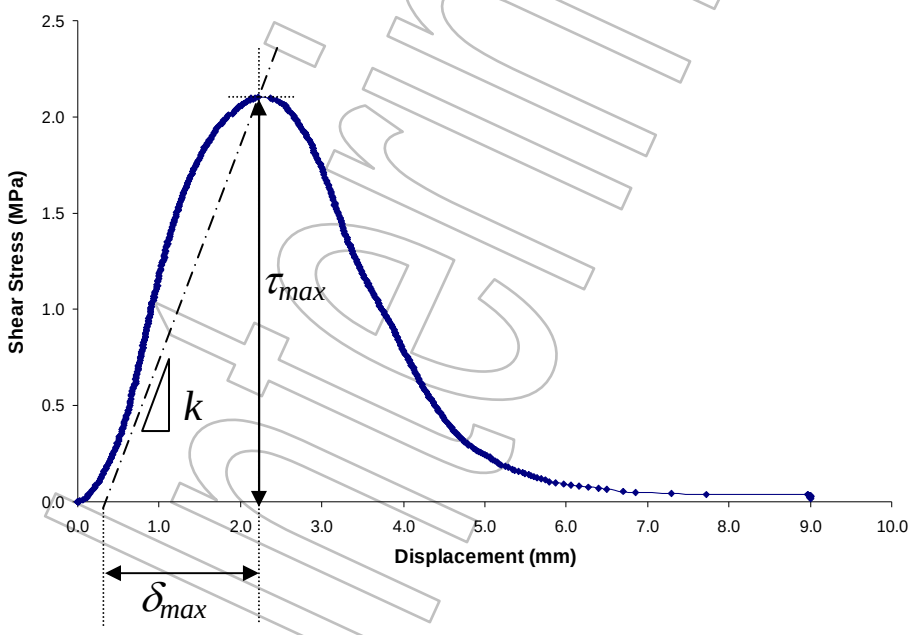

Figure 9/14: Example of shear stress vs displacement data plot

Interim Advice

955 Emergency Patching

General

1 Emergency patching shall be carried out with approved kits of proprietary Emergency Patching Materials (EPM) complying with this clause.

Surface Preparation and Usage

2 The surface of the road shall be brushed mechanically or by hand with a stiff broom to remove loose material. Any standing water shall be brushed away, but the surface may remain damp.

3 Installation shall not be undertaken unless weather conditions are such that the repair material will have at least 30 minutes in which to cure and harden.

Components of the Emergency Patching Material kit

4 Each kit shall comprise the materials and tools necessary to carry out an emergency repair to the surface of a road.

5 Each kit shall contain all the constituents which, when mixed together, will satisfy the performance requirements set out in this clause. It shall contain sufficient coarse aggregate with a minimum PSV of 55, for application to the laid material to ensure that a durable, skid resistant surface can be produced.

6 Each kit shall contain full and detailed instructions, including if necessary a cd/dvd video or a series of still photographs, to ensure that inexperienced operatives can prepare and lay the emergency patching material correctly without difficulty.

7 No individual part of a kit shall weigh more than 20 kg

Performance requirements for the patching material

8 The repair material shall have the following characteristics:

(i) It shall be capable of being mixed and spread by hand in thickness from 3 mm to 30 mm.
(ii) It shall cure to a strength such that it is capable of being trafficked by heavy vehicles without damage within 30 minutes of installation when laid at surface temperatures between 3 ºC and 40 ºC.
(iii) None of the material shall debond or delaminate from the existing surface of the road for a period of at least 7 days from installation. Any subsequent delaminated material shall not be of sufficient size as to cause a hazard to traffic.
(iv) It shall retain surface applied aggregate.
(v) It shall have a minimum shelf life of 12 months.

9 The performance shall be demonstrated at a site installation trial and by laboratory evaluation.

10 Products shall be independently certified to show compliance with this Clause.

Laboratory evaluation of patching material

11 Test specimens shall be prepared by coating a substrate manufactured with material complying with the BBA Guidelines for High Friction Surfacing. The coating shall be in the range 3 mm to 6 mm thick.

Interim Advice

Tensile Adhesion

12 A tensile adhesion test shall be carried out not more than 48 hrs after sample preparation. A minimum value of 0.2 N/mm^2 shall be achieved.

Retained skid resistance after scuffing

13 A scuffing test shall be carried out in accordance with BBA Guidelines for High Friction Surfacing except that the test temperature shall be 30 ºC and the test shall be carried out not more than 48 hours after sample preparation.

14 A minimum retained Pendulum Test Value of 55 and a minimum retained texture depth of 0.9 mm shall be achieved.

Erosion Index

15 Following the scuffing test carried in accordance with sub clause 13, the Erosion Index shall be less than 5.

Interim Advice